Design Standards Technical Manual (DSTM)

Adopted by Resolution 24-04 (January 17, 2024)

Table of Contents:

NORTH LOGAN CITY CONSTRUCTION STANDARDS

The following standards shall apply to the design and construction of public works improvements for subdivisions and other developments within the North Logan City limits. These standards are considered to be minimum standards. Applicants may be required to meet a higher standard based on engineering safeguards if it is deemed necessary by the City or its representatives.

If any section, subsection, sentence, clause, or phrase of this ordinance is for any reason held by any court to be invalid, such holding shall not affect the validity of the remaining portions of this ordinance. The ordinance shall become effective upon the posting or publication thereof in the manner provided by the laws of the State of Utah and the ordinances of this City.

A. Current (2017) edition of the Manual of Standard Specifications published by the Utah Chapter of the American Public Works Association (APWA) with the following modifications:

1. Current amendments published by the Utah Chapter of the APWA.
2. References to OWNER shall mean North Logan City and references to ENGINEER shall mean North Logan City's engineer.
3. Modify Section 00 72 00 – GENERAL CONDITIONS as follows:
    a. Article 1.1 DEFINED TERMS – delete paragraph A, subparagraph 23.
    b. Article 1.1 DEFINED TERMS – delete paragraph A, subparagraph 36.
    c. Article 1.1 DEFINED TERMS – add Section 12D-105 of the North Logan Municipal Code to paragraph A.
4. Delete Section 01 11 00 – SUMMARY OF WORK.
5. Delete Section 01 24 00 – VALUE ANALYSIS.
6. Modify Section 01 25 00 – PRODUCT OPTIONS AND SUBSTITUTIONS as follows:
    a. Article 1.1 SECTION INCLUDES – delete paragraph B.
    b. Article 1.2 DEFINITIONS - delete paragraph B and its subparagraphs and replace with the following: No substitutions are allowed.
    c. Delete Articles 1.3 through 1.7.
7. Delete Section 01 26 00 – CONTRACT MODIFICATION PROCEDURE.
8. Delete Section 01 29 00 – PAYMENT PROCEDURE.
9. Modify Section 01 31 19 – PRECONSTRUCTION CONFERENCE as follows:
    a. Article 1.2 PRECONSTRUCTION CONFERENCE, paragraph B – delete subparagraphs 2 and 4.
    b. Article 1.2 PRECONSTRUCTION CONFERENCE, paragraph C – delete subparagraph 3 and delete "and Change Orders" at end of subparagraph 6.
10. Delete Section 01 32 16 – PROGRESS SCHEDULE and replace with requirements in supplemental specification 01 32 16(S).
11. Modify Section 01 35 10 – ACCEPTANCE as follows:
    a. Article 1.3 ACCEPTANCE – add paragraph E as follows: Acceptance testing will govern over quality control testing performed by Contractor. Acceptance testing

does not relieve Contractor of responsibility for providing adequate quality control measures.

12. Modify Section 01 43 40 – RESIDENT SUPERINTENDENT as follows:
    a. Article 1.2 QUALIFICATIONS – delete paragraph D.
13. Modify Section 01 45 00 – QUALITY CONTROL as follows:
    a. Part 1 GENERAL – add article 1.7 as follows:
       1.7 COORDINATE CONSTRUCTION STANDARDS
       A. Supplementary documents are essential parts of the construction standards and requirements occurring in one are binding as though occurring in all.
       B. Governing ranking in case of discrepancy is:
          1. Information:
             a. Project Construction Drawings and Specifications
             b. Supplemental Specifications
             c. Supplemental Drawings
             d. APWA Standard Specifications
             e. APWA Standard Drawings
          2. Dimensions:
             a. Plan
             b. Calculated
             c. Scaled
       C. Notify Owner and Engineer promptly of any omissions or errors in contract so that necessary corrections and interpretations can be made.
14. Modify Section 01 55 26 – TRAFFIC CONTROL as follows:
    a. Article 1.3 SUBMITTALS – change paragraph A to read as follows: Traffic control plan at least 10 days prior to starting work.
15. Delete Section 01 64 00 – OWNER-FURNISHED PRODUCTS.
16. Modify Section 03 30 04 – CONCRETE as follows:
    a. Article 2.5, paragraph A – edit subparagraph 2 from “4000 minimum” to “4500” minimum.”
    b. Article 2.5, paragraph A – edit subparagraph 3 from “4000 minimum” to “4500” minimum.”
    c. Article 2.5, paragraph B – delete subparagraphs 1 and 2 and replace with the following:
       1. Use Type II – Moderate Sulfate Resistant or Type II-V blend for Class A through C concrete.
       2. Use Type V – High Sulfate Resistant for Class S2 and S3 concrete. Meet or exceed sulfate Exposure Class S2 Severe in accordance with Tables 4.2.1 and 4.3.1 of ACI 318.
17. Modify Section 03 30 05 – CONCRETE TESTING as follows:
    a. Article 3.2 CAST-IN-PLACE PRODUCTS – delete paragraph D. and H.
18. Delete DIVISION 26 – ELECTRICAL
19. Modify Section 26 29 13 – MOTOR CONTROLLER as follows:

a. Article 1.1 SECTION INCLUDES, paragraph B – add subparagraph 5 as follows: Variable-frequency drives.
b. Part 2 PRODUCTS – add article 2.7 as follows:
   2.7 VARIABLE-FREQUENCY DRIVES:
   A. Variable-frequency drive (VFD), single-phase or three-phase, to adequately start and run motor.
   B. Provide main breaker, motor overload protection, over-voltage protection, and surge protection.
   C. Provide Hand-Off-Auto selector switch on cover with green pilot light for run indicator. VFD shall be programmed for all desired pump controls.
   D. Provide adequate ventilation for VFD case.

20. Modify Section 31 05 13 – COMMON FILL as follows:
    a. Article 2.3 – GRANULAR BACKFILL BORROW, paragraph B – delete paragraph and replace with the following: Shall not contain more than fifteen percent (15%) of material passing a 200 mesh sieve, and shall be free from sod, vegetation, and other organic or deleterious materials.
    b. Article 2.11 – SOURCE QUALITY CONTROL – add paragraph D as follows: Unsuitable materials that occur in the foundations for embankments and fills shall be removed by clearing, stripping, and/or grubbing. Where unsuitable materials occur after stripping, the foundation shall be scarified to a depth of not less than six inches, and the loosened material shall be moistened and compacted to ninety five percent (95%) of maximum dry density as measured by AASHTO T-180. When the embankment or fill exceeds the amount of excavation, sufficient additional material shall be provided by the contractor and shall be subject to the review and approval of the engineer prior to hauling.
21. Modify Section 31 23 16 EXCAVATION as follows:
    a. Article 3.9 – TRENCH EXCAVATION – delete paragraph C and replace as follows: Trench width at the ground surface may vary depending on depth, type of soil, and position of surface structures. The minimum clear width of the trench, sheeted or unsheeted, measured at the flow line of the pipe should be 1’ greater than the outside diameter of the pipe. The maximum recommended clear width of the trench at the top of the pipe is equal to the pipe outside diameter plus 2’. If the maximum recommended trench width must be exceeded or if the pipe is installed in a compacted embankment, then pipe embedment should be compacted to a point of at least 2 ½ pipe diameters from the pipe on both sides of the pipe or to the trench wall, whichever is less. Notify ENGINEER if excavation operations exceed any indicated line and grade limits.
22. Modify Section 31 23 17 – ROCK REMOVAL as follows:
    a. Article 3.4 – ROCK REMOVAL – EXPLOSIVE METHOD – amend paragraph A as follows: Provide a qualified explosives expert to act as an advisor and consultant during drilling and blasting operations. Blasting will not be allowed except by permission from the ENGINEER. The CONTRACTOR shall comply with all laws, ordinances, and applicable safety code requirements and regulations relative to the handling, storage, and use of explosives and protection of life and property, and he shall be fully responsible for all damage attributable to his blasting operations.

23. Modify Section 32 05 10 – BACKFILLING ROADWAYS as follows:
    a. Article 3.3 – LAYOUT – add paragraph F as follows: Any natural slopes identified as forty (40) percent or greater shall be designated undevelopable area. Said slope, if retained within the subdivision may be designated and maintained as common area. In no event shall streets traverse such slopes.
    b. Article 3.3 – LAYOUT – add paragraph G as follows: Cut or fill slopes shall be limited to fifteen (15) feet in vertical height, unless with the recommendation of the City Engineer.
    c. Article 3.3 – LAYOUT – add paragraph H as follows: No excavation creating a cut face and no fill creating an exposed surface shall have a slope ratio exceeding one-half horizontal to one vertical.
    d. Article 3.3 – LAYOUT – add paragraph I as follows: The City Engineer may require the slope of a cut or fill be made more level if at any time it is found that the material being cut or the fill is unusually subject to erosion, static or dynamic instability or if other conditions make such requirement necessary for stability.
    e. Article 3.4 – SUBGRADE – replace paragraph B as follows: In both cut and fill areas, paving subgrade shall be scarified to a depth of six inches and compacted to the equivalent of ninety five percent (95%) of maximum dry density as measured by AASHTO T-180. No rocks larger than three inches in diameter, organic material, soft clay, or any other deleterious material will be permitted in this scarified subgrade layer. Rough subgrades shall be shaped and graded to within a tolerance of +/- 0.15 feet of design grade and drainage shall be maintained at all times. Before backfilling over subgrade, get ENGINEER's review of subgrade surface preparations.
24. Delete Section 32 11 24 – PULVERIZED PAVEMENT BASE COURSE.
25. Modify Section 32 12 03 – ASPHALT BINDERS as follows:
    a. Part 2 Products – delete article 2.2.
26. Modify Section 32 12 05 – BITUMINOUS CONCRETE as follows:
    a. Article 1.1 – SECTION INCLUDES – add paragraph B saying the following: Delete all references to Marshall Mix Design in this section.
    b. Article 2.3 – ADDITIVES, paragraph D – delete subparagraph 2.
    c. Article 2.4 – MIX DESIGN, paragraph A, - delete subparagraph 1 and replace with the following: See mix design requirements in supplemental specification 32 12 05(S).
27. Modify Section 32 12 16.13 – PLANT-MIX BITUMINOUS PAVING as follows:
    a. Article 3.4 – PAVEMENT PLACEMENT – change subparagraph 2 to subparagraph 3; add subparagraph 2 as follows: Hot Mix and Warm Mix laydown and pickup procedures are to be performed as follows. Mix is to be placed in windrows and picked up with a pickup machine. Pickup machines should ensure that base course is not introduced into mix and should remain at least ½ inch above base course grade.
    b. Article 3.10 – OPENING TO TRAFFIC – change "180 deg F" to "120 deg F."
    c. Article 3.10 – OPENING TO TRAFFIC – add paragraph B as follows: Traffic shall be reinstated only after inspection and approval by the ENGINEER.
28. Modify Section 32 12 16.18 – RECYCLE BITUMINOUS PAVEMENT as follows:
    a. Article 1.4 – SUBMITTALS, paragraph B – delete subparagraph 2.

29. Modify Section 33 05 03 – COPPER PIPE as follows:
    a. Article 2.2 CONNECTIONS, paragraph A – delete “Flared”.
30. Modify Section 33 05 05 – DUCTILE IRON PIPE as follows:
    a. Article 2.1 PIPE AND FITTINGS, paragraph A – delete subparagraph 6.
    b. Article 2.2 COVERINGS, paragraph A – delete and replace with the following: Buried Mechanical Joints: In areas with high water table, use stainless steel bolts and nuts.
31. Modify Section 33 05 06 – POLYETHYLENE PIPE as follows:
    a. Article 2.1 SMOOTH WALL PIPE SYSTEMS - add paragraph E as follows:
        E. High density polyethylene pipe, in accordance with NSF-14 and AWWA C901.
            1. Iron Pipe Size: ASTM D2239, ¾ and 1 inch services.
            2. Copper Tub Size: ASTM D2737, 1.5 and 2 inch services.
            3. Working Pressure: 200 pounds per square inch.
            4. Color: Blue.
            5. Fittings: Bronze, compression fittings.
32. Modify Section 33 05 07 – POLYVINYL CHLORIDE PIPE as follows:
    a. Article 2.2 PRESSURE PIPE SYSTEMS, paragraph A – delete and replace with the following: Pipe: Conform to AWWA C900, pressure class 235 psi, DR 18.
33. Modify Section 33 05 20 – BACKFILLING TRENCHES as follows:
    a. Article 1.4 SUBMITTALS – add paragraph C, as follows: All density and moisture content testing shall be made by the owner’s project engineer at no expense to the City. The CONTRACTOR shall provide the City with all test results.
    b. Article 1.6 STORAGE – add paragraph C as follows: All excavated material shall not be stockpiled in a way that obstructs sidewalks, driveways, pressurized hydrants, valve boxes, manholes, drainage structures, and other utility controls.
    c. Article 2.1 BACKFILL MATERIALS – add paragraph E as follows: Excavation shall not be carried below the grade shown on the approved drawings. Any unauthorized excavation made below grade for any reason shall be backfilled in accordance with these specifications.
    d. Article 2.1 BACKFILL MATERIALS, paragraph E – add subparagraph 1 as follows: If native material obtained from excavations is unsuitable for bedding or pipe zone materials and if trench bottom is unsuitable to support pipe, a minimum of six inches below grade will be removed and backfilled with imported granular borrow to provide a stable subgrade.
    e. Article 2.1 BACKFILL MATERIALS – add paragraph F as follows: Gravel and pea gravel is allowed as backfill for trenches only in locations where the water table is 0.5’ to 1.5’ below existing grade.
    f. Article 3.4 TRENCH ABOVE PIPE ZONE, paragraph D – add the following: For sewer lines, install identification tape two feet above top of pipe.
    g. Article 3.8 TOLERANCES, paragraph A – add the following: The backfill material for each layer shall be evenly wetted to ensure that optimum moisture content remains within +/- 2% of its optimum moisture content.”
    h. Article 3.9 FIELD QUALITY CONTROL, paragraph A – add the following: If the required relative density is not attained, test sections will be required to

determine adjustments in compacting equipment, thickness of layers, moisture content, and compactive effort necessary to attain the specified minimum relative density. Any approval of equipment, layer thickness, moisture content, and compactive effort shall not relieve the CONTRACTOR of the responsibility for attaining the specified minimum relative densities. The CONTRACTOR shall not receive an extension of time for not passing relative density tests.

34. Modify Section 33 05 23 – TRENCHLESS UTILITY INSTALLATION as follows:
    a. Add Article 2.4 CASING SPACES with paragraph A as follows: Casing Spacers: Polyethylene, 8 inches minimum length and heights as needed to fit casing.
    b. Article 3.4 PIPE SUPPORT IN CASING TUNNEL, paragraph A – delete and replace with the following: Install casing spacers per manufacturer's recommendations and as follows. Place casing spacers on each side of pipe joint with distance not to exceed 2 feet. Place casing spacers at intervals not to exceed 8 feet.
    c. Article 3.4 PIPE SUPPORT IN CASING TUNNEL, paragraph B – delete and replace with the following: Install cover over end of casing to prevent backfill material from entering casing.
35. Modify Section 33 05 25 – PAVEMENT RESTORATION as follows:
    a. Article 1.5 – ACCEPTANCE – add paragraph E as follows: The CONTRACTOR shall be responsible for the protection and the restoration or replacement of any existing improvements on public or private property at the start of work or placed there during the progress of the work. Existing improvements shall include but are not limited to permanent surfacing, curbs, ditches, driveways, culverts, fences, and walls. All improvements shall be reconstructed in accordance with these specifications to equal or better, in all respects, the existing improvements removed.
    b. Article 3.5 – BITUMINOUS PAVEMENT RESTORATION, paragraph B – add subparagraph 1 as follows: Before any permanent resurfacing is placed, the contractor shall trim or cut the existing paving to clean, straight lines as nearly parallel to the center line of the trench as practicable.
    c. Article 3.10 – REPAIR – add paragraph D as follows: All concrete curbs, gutters, sidewalks, and driveways damaged by the work shall be replaced to the next joint or coring lining beyond the damaged or broken section. All new concrete shall match, as near as possible, the appearance of adjacent concrete improvements.
36. Modify Section 33 08 00 – COMMISSIONING OF WATER UTILITIES as follows:
    a. Article 3.6 EXFILTRATION TEST – delete paragraphs A – E and replace with the following:

        A. All PVC water main testing shall follow AWWA C605 for hydrostatic pressure and leakage (exfiltration) testing.
        B. All ductile iron water main testing shall follow AWWA C600 for pressure testing and installation.
        C. All sewer main line shall be pressure tested at 5 psi for 5 minutes at all sections (manhole to manhole).
        D. Exfiltration testing is required for pressure irrigation landscaping, sanitary sewers, storm drains, potable water, and non-potable water.

E. Water pressure testing minimum is 150% of system pressure in the area (surrounding main lines) for 2 hours.

b. Article 3.9 – TRACER WIRE CONTINUITY TEST – add paragraph B as follows: Tracer wire required for all water and sewer pipes.
c. Article 3.10 – COMMISSIONING TEST SCHEDULE, paragraph A – delete "Table 3 - Commissioning Test Schedule" and replace with "Table 3 - Commissioning Test Schedule" included in supplementary specification 33 08 00(S).
d. Add Article 3.12 – TESTING RESULTS with paragraph A as follows: All testing results must meet minimum requirements for APWA, AWWA, and Utah DDW (Division of Drinking Water) standards. If there is conflict between minimum requirements, adhere to the strictest minimum.

37. Modify Section 33 11 00 – WATER DISTRIBUTION AND TRANSMISSION as follows:
    a. Article 2.1 PIPES AND FITTINGS – add paragraph E as follows: See pipe material requirements in supplemental specification 33 11 00(S).
    b. Article 2.6 TAPPING SADDLES, paragraph A – add the following: Provide nylon coated saddle with full support around pipe circumference and 2 inch minimum bearing width. Do not use u-bolt type strap or type with lugs which dig into pipe.
    c. Article 2.7 SERVICE CONNECTION, paragraph A – add the following: Do not use flared fittings.
    d. Article 2.8 ACCESSORIES, paragraph A –add the following: In areas with high water table, use stainless steel bolts and nuts. Stainless steel bolts required for all hydrants and valves.
    e. Article 2.8 ACCESSORIES – add paragraph I as follows: Tracer Wire: 14 AWG solid, Type UF, copper conductor with PVC insulation, suitable for direct burial and rated for 600 volts. Blue colored insulation to meet color code standard for identification of buried utilities. For splices, use direct bury, waterproof wire connector.
    f. Article 3.4 INSTALLATION – PIPE AND FITTING – add paragraph I as follows: Tracer Wire: Install tracer wire continuous below spring line of pipe. Install tracer wire with PVC main lines, PVC fire hydrant lines and polyethylene service lines. Wrap tracer wire around fire hydrant above ground, extend loop to top of valve boxes, and wrap around meter setter. Where there is existing tracer wire, connect new tracer wire to existing tracer wire. If splices are required, make watertight connections.
    g. Article 3.9 INSTALLATION – SERVICE LINES, paragraph B – delete subparagraph 5 and replace with the following: For copper-to-copper connections use brass compression coupling.
    h. Article 3.11 DISINFECTION – delete paragraph A and replace with the following: All water mains shall follow AWWA C651 for disinfection testing and disposal.
38. Modify Section 33 12 16 – WATER VALVES as follows:

a. Article 2.1 VALVES – GENERAL – add paragraph I as follows: Stainless steel bolts required for all water valves.

39. Modify Section 33 12 19 – HYDRANTS as follows:
    a. Article 2.1 DRY-BARREL FIRE HYDRANT, paragraph A – add the following: Allowable fire hydrants – in preference order – include Clow, East Jordan, Mueller, and Waterous.
    b. Article 2.1 DRY-BARREL FIRE HYDRANT, paragraph B – add subparagraph 11 as follows: Stainless steel bolts required for all fire hydrants.
    c. Article 2.2 PIPE AND FITTINGS – add paragraph E as follows: Stainless steel bolts required for all fire hydrants.
    d. Article 2.3 VALVES – add paragraph E as follows: Stainless steel bolts required for all fire hydrants.
    e. Article 3.2 INSTALLATION – delete paragraph F.
40. Modify Section 33 12 33 – WATER METER as follows:
    a. Article 2.3 SERVICE LINE, VALVES, AND FITTINGS – add paragraph F as follows: A corporation stop or wheel valve is required inside the barrel or vault on the city side of the setter for all meter sizes.
    b. Article 2.3 SERVICE LINE, VALVES, AND FITTINGS – add paragraph G as follows: All meters within an APWA concrete meter box – see supplementary specification 33 12 33(S) – must include an additional valve on the outside of the vault on property owner's side. "Control valve".
    c. Article 2.4 METER BOXES – delete paragraph A and B; replace with the following: For meter box requirements, see supplemental specification 33 12 33(S).
41. Modify Section 33 31 00 – SANITARY SEWERAGE SYSTEMS as follows:
    a. Article 2.1 – PIPES AND FITTINGS – add paragraph D as follows: See pipe material requirements in supplemental specification 33 31 00(S).
    b. Article 2.3 MANHOLES – delete paragraph B and replace with the following: Steps: Fiberglass or steel encased by copolymer polypropylene, placed at 12 inches on center vertically, set into manhole wall.
    c. Article 2.3 MANHOLES – delete paragraph C and replace with the following: Top: Eccentric cone. Eccentric flat slab concrete deck allowed only with ENGINEER'S permission.
    d. Article 2.3 MANHOLES – edit paragraph D to include the following: Manhole covers shall be vented.
    e. Article 3.5 INSTALLATION – MANHOLES, paragraph E – replace "1/2 inch" with ¼ inch.
42. Modify Section 33 41 00 – STORM DRAINAGE SYSTEMS as follows:
    a. Article 2.1 – PIPES AND FITTINGS – add paragraph D as follows: See pipe material requirements in supplemental specification 33 41 00(S).
    b. Article 2.5 MANHOLES – delete paragraph B and replace with the following: Steps: Fiberglass or steel encased by copolymer polypropylene, placed at 12 inches on center vertically, set into manhole wall. For drop manholes place steps 90 degrees from the service connection.

c. Article 2.5 MANHOLES – delete paragraph C and replace with the following: Tope: Eccentric cone. Eccentric flat slab concrete deck allowed only with ENGINEER'S permission.
d. Article 2.6 INLETS, CATCH BASINS, AND CLEANOUTS, paragraph C – add subparagraph 3 as follows: Provide bicycle safe grate.

B. Current (2017) edition of the Manual of Standard Plans published by the Utah Chapter of the American Public Works Association (APWA) with the following modifications:

1. Current amendments published by the Utah Chapter of the APWA.
2. North Logan City Standard Drawings.
3. Replace all reference to "Class 4000 Concrete" with "Class 4500 Concrete."
4. Delete Plan No. 205. Refer to supplemental drawing ST-1 and ST-03.
5. Delete Plan No. 211 and 213. Refer to supplemental drawing ST-5.
6. Delete Plan No. 215, 216 and 221. Refer to supplemental drawings ST-10 and ST-11.
8. Delete Plan No. 231. Refer to supplemental drawing ST-7, 8, and 9.
9. Delete Plan No. 251. Refer to supplemental drawing ST-6.
10. Delete Plan No. 255. Refer to supplemental drawing TR-1 and TR-2.
11. Delete Plan No. 273, 274, and 275. Refer to supplemental drawing ST-15.
12. Delete Plan No. 317. Refer to supplemental drawing ST-14.
13. Delete Plan No. 341. Refer to supplemental drawing SS-1.
14. Delete Plan No. 345 and 360. Refer to supplemental drawing SS-2.
15. Delete Plan No. 381 and 382. Refer to supplemental drawings TR-1 and TR-2.
16. Modify Plan No. 402 as follows:
    a. Delete dustpan.
17. Delete Plan No. 411, 412, and 413. Refer to supplemental drawings SS-1 and SS-2.
18. Delete Plan No. 431. Refer to supplemental drawing SS-3.
19. Delete Plan No. 511. Refer to supplemental drawing CW-1.
20. Delete Plan No. 521 and 522. Refer to supplemental drawings CW-4 and CW-5.
21. Add note to Plan No. 523, 525, 527, and 529 as follows:
    a. These plans are superseded by and supplemental to Supplemental Drawings. Refer to supplemental drawing CW-2 for design of water valves. Minimum mainline water valve size is 8".
22. Delete Plan No. 561 and 562. Refer to supplemental drawing CW-6, CW-7, CW-8, and CW-9.
23. Delete Plan No. 574. Refer to supplemental drawing CW-3.
24. Plan No. 710 through 743 – these plans are superseded by and supplemental to North Logan City Public Street Lighting Design Standards.
25. Delete Plan No. 831. Refer to supplemental drawing ST-12.

C. Roadway Design Guidelines

The City requires all new roadways to adhere to the most current edition of the AASHTO Green Book (*A Policy on Geometric Design of Highways and Streets*).

D. Supplemental Specifications:

a. Section 32 12 05(S)

1. Plant-Mix Asphalt Paving:
    a. Asphalt: For residential traffic areas use PG58-28 or PG64-34 and for commercial, industrial or other heavy truck traffic areas use PG64-34.
    b. Aggregate: ½ inch maximum gradation (DM-1/2) or 3/8 inch (DM-3/8) for bike paths and trails.
    c. Mix Design: Superpave Method.

b. Section 33 08 00(S)

Table 3 - Commissioning Test Schedule

		Alignment	Grade	Joint	Infiltration	Exfiltration	Distortion	Obstruction	Disinfection	Tracer Wire
Gravity Irrigation Landscaping	(a)		●							●
Pressure Irrigation Landscaping	(a,b,c)		●			●				●
Sanitary Sewers	(b,c)	●	●	●	●	●	●	●		●
Sub-drains			●				●	●		●
Storm Drains	(c,d)	●	●	●	●	●	●	●		●
Potable Water	(c,d,e)					●	●	●	●	●
Non-potable water	(d)					●	●	●		●

NOTES

(a) All lateral pipes drain.

(b) Operational testing: Landscaping systems.
- Perform operational testing after hydrostatic test is complete, backfill is in place, and sprinkler heads are adjusted to final coverage.
- Demonstrate system meets coverage requirements and automatic control function properly.
- Coverage requirements are based on operation of one (1) circuit at a time.

(c) Exfiltration test for pressure pipeline systems.

(d) Exfiltration when requested by ENGINEER or specified elsewhere.

(e) Legally dispose disinfection and flushing water and ensure no damage to the environment.

c. Section 33 11 00(S)

1. Culinary Water:
    a. Main Lines: AWWA C900 DR14 or ductile iron.
        i. Main lines are 8” minimum.

b. Service Lines: High-density polyethylene (HDPE) copper in accordance with NSF-14, NSF-61, and AWWA C901.

d. Section 33 12 33(S)

a. Water Meters: ¾" to 1" – use 24-inch ADS barrel.
b. Water Meters: 1-½" to 2" – use 36-inch ADS barrel.
c. Water Meters: Greater than 2" (or 2" in high traffic areas) – use 24-inch APWA concrete box.

e. Section 33 31 00(S)

1. Sewer:
   a. Mains and Service Lines: PVC
      i. Services are 4" minimum.
      ii. Concrete allowed for mains greater than 8".

f. Section 33 41 00(S)

1. Storm Drain:
   a. Pipe: PVC or corrugated polyethylene with smooth interior.

g. Section 01 32 16(S)

SECTION 01 32 16(S)
PROGRESS SCHEDULE

PART 1 GENERAL
1.1 SECTION INCLUDES
A. Requirements for preparing and submitting construction progress schedule.
1.2 TYPE OF SCHEDULE
A. CONTRACTOR's choice.
1.3 SUBMITTALS
A. Prior to construction, submit preliminary progress schedule.
B. During construction submit:
1. Updated progress schedule on monthly basis.
2. Promptly deliver to ENGINEER and OWNER.
1.4 CONTENT OF SCHEDULE
A. Title Block: show on each page:
1. Project title and CONTRACTOR's name.
2. Date of submittal, revision number, and page number.
3. Legend of symbols, codes and abbreviations.
B. Activities: Show complete sequence of construction activity networks with starting and ending time for all activities, in no less than weekly divisions. Provide complete sequence of construction by activity.
PART 2 PRODUCTS
Not Used.
PART 3 EXECUTION
Not Used.
END OF SECTION

E. North Logan City Standard Drawings:

In case of contradiction between APWA and North Logan City Standard Drawings, adhere to the North Logan City Standard Drawings.

F. Subdivision Agreement – Improvement Development (SAID Agreement):

The Developer shall execute North Logan City's Subdivision Agreement – Improvement Development (SAID Agreement) prior to starting work.

G. North Logan City Street Lighting Design Standards

In case of contradiction between APWA and the North Logan City Public Street Lighting Design Standards, adhere to the North Logan City Public Street Lighting Design Standards.

H. North Logan City Street Tree Manual

The North Logan City Street Tree Manual shall function as the standard for all placement, removal and other work associated with street trees. Any standard regarding street trees within the current (2017) edition of the Manual of Standard Specifications published by the Utah Chapter of the American Public Works Association (APWA) or in the Current (2017) edition of the Manual of Standard Plans published by the Utah Chapter of the American Public Works Association (APWA) is superseded by and supplemental to the North Logan City Street Tree Manual.

I. Encroachment Permit:

Prior to cutting any paved street, the developer shall obtain an encroachment permit from North Logan City. The street shall be repaired in accordance with North Logan City's Construction Standards. At the completion of the construction work, the street repair shall be inspected and accepted by North Logan City. Unacceptable work shall be corrected by the developer. (Roadway/Right-of-Way Encroachment Permit on North Logan City Website)

J. Drainage, Floodplains, and Water Quality Standards:

Drainage, Floodplains, and Water Quality

1. General

The following design standards apply to the design of all stormwater and floodplain improvements for areas within North Logan City (the City). All hydrologic and hydraulic evaluation and design for a proposed development shall be performed in accordance with sound and accepted engineering practice. All drainage studies and design must be completed and prepared by a professional engineer, licensed in the State of Utah and qualified to perform such work.

2. Hydrologic Evaluation

The hydrologic evaluation should meet the following criteria:

- All components of the storm drainage system shall be sized based on the design frequency in the table below. The size of the drainage area shall include on-site and off-site lands contributing to the design point.

Design Storm	Facilities
10-year	Inlets, laterals, minor trunk lines, and roadway spread
100-year	Storage basins, culverts, major trunk lines, and major conveyance facilities

The peak rate of runoff for all areas can be estimated using the NRCS (SCS) method. The rational method shall only be used to estimate the peak rate of runoff for areas of up to 10 acres.

- Runoff volume shall be calculated based on the NRCS method. For detention design, a 100-year 24-hour storm shall be used to calculate basin inflow. Detention basin outflow shall be based on the pre-development 10-year 24-hour and 100-year 24-hour storm events.
- Precipitation depth and intensity shall be obtained from NOAA Atlas 14.
- When using the NRCS method of analysis, the NRCS Type II 24-hour precipitation temporal distribution and the NRCS unit hydrograph shall be used.
- The designer shall use the NRCS velocity method or other appropriate method to estimate time of concentration. In all instances, a minimum time of concentration of 5 minutes shall be used.

3. Hydraulic Evaluation

Hydraulic capacity for open channel or closed conduit flow shall be determined by the Manning Equation. Velocities in open channels at design flow shall not be greater than that velocity which will begin to cause erosion or scouring of the channel. Velocities in closed conduits at design flow shall be at least 2 ft/sec but not more than the velocity which will cause erosion damage to the conduit. Manholes are to be placed every 500 feet or every change of grade or angle.

Storage Criteria

Surface Storage Facilities

Surface storage facilities must include xeriscape or lawn surfacing that extends to the property boundary and is maintained by the developer or an established HOA. Facilities that are to become property of the City must include xeriscape surfacing that extends beyond the storage facility to the property boundary.

i. Retention Facilities

Retention facilities are used as infiltration basins, with the only outlet being the emergency spillway. These are standard for both commercial and residential development. When surface retention basins are required, soil studies of the saturated and unsaturated zones are required to ensure that the retention basin will function properly over the life of the basin. Surface storage facilities shall be designed to completely drain within 3 days after the end of a storm event. Retention Facilities must also meet storage requirements set forth under the detention facilities section.

ii. Detention Facilities

Detention facilities are used to temporarily detain stormwater runoff and release it at a controlled rate. Detention facilities are only permitted in commercial areas where retention facilities are not feasible. The controlled rate is outlined in the Storage Criteria Design Requirements section below. These facilities shall be designed to completely drain within 3 days after the end of a storm event.

All new development must provide sufficient storage to account for the additional runoff created by the development. Adequate storage shall be provided such that each of the following applies:

- Post-developed discharge rates shall not exceed pre-developed discharge rates for the 10- year and 100-year storms.
- The entire 100-yr 24-hour storm shall be routed through the principal outlet without activating the emergency spillway.
- Retention basins, if allowed by the City, must be sized with a storage volume equal to the entire 100-yr post-developed runoff volume.
- Runoff greater than that occurring from the 100-year 24-hour storm will be passed through an emergency spillway.
- Principal outlets shall be at least 15-inches in diameter to minimize the chance of clogging and to facilitate cleaning. Orifice plates may be used on the upstream end of the principal outlet pipe to reduce the maximum release rate as needed.
- Emergency spillways shall be designed to safely pass the entire post-developed 100-year flood, routed through the detention basin assuming the principal outlets are not functioning. A minimum of 1 foot of freeboard above the emergency spillway design water surface elevation is required.

The peak discharge rate from the detention basin shall not exceed the capacity of the downstream conveyance system. Conveyance systems below detention basins must have sufficient capacity for the greater of the following:

- Sufficient capacity to safely convey the 100-yr 24-hour peak flow obtained from combining the Principal Outlet Outflow Hydrograph with downstream inflow hydrographs.
- Sufficient capacity to safely convey the 100-yr 24-hour peak flow obtained from combining the Emergency Spillway Outflow Hydrograph with downstream inflow hydrographs.

If the detention basin is classified as a dam, the facility shall also comply with prevailing dam safety standards as outlined by the Utah State Dam Safety Act and the Utah Division of Water Rights.

Fencing around detention basins shall be maximum 4' in height. Fences shall be constructed with 12' minimum access gates for backhoe access and other maintenance use.

Subsurface Facilities

Subsurface retention facilities are acceptable only in commercial developments where surface storage is not feasible and must meet the requirements set forth under the detention facilities. Additionally, subsurface facilities must accommodate traffic loadings where applicable.

4. Drainage Report and Plan

Below is a list of requirements that apply to stormwater systems. If the Final Plat is to be presented in sections, a drainage plan for the entire area shall be presented with the first section, and appropriate development stages for the drainage system for each section indicated. Information identified in the checklist should be submitted:

i. Drainage Report

- Prepared and stamped by a professional engineer, licensed in the State of Utah and qualified to perform such work
- Narration for basis of selection and operation of the drainage design
- Pre- and Post-development peak flows rate calculations
- Pre- and post-development runoff volume calculations
- Document any applicable field test results
- Copies of associated permits, easements, and discharge agreements
- Operation and Maintenance (O&M) Plan
- Appendix: All charts and associated documents used to determine calculations and design.

ii. Comprehensive and complete drainage plan

- Topographic map of pre-development and finished grade contours
- Onsite proposed building elevations of adjoining lots & finish floors
- Grade of all impervious surfaces
- Existing drainage and irrigation water conveyance systems within the property line or developed site
- New or modified drainage systems including system dimensions, profiles, and elevations
- Detail sheets

The drainage report and plan will be reviewed by the City Engineer and will recommend final approval based on meeting requirements outlined in this document.

5. Design Standards

All components of the drainage design and construction shall conform to the most current APWA specifications and the City's supplemental drawings and specifications.

6. Floodplains

The Floodplain Development Permit is the mechanism by which the City evaluates any and all impacts of activities proposed within regulated floodplains. Any party undertaking development within a designated floodplain must obtain a Floodplain Development Permit prior to the work commencing.

- No work may start until a permit has been issued by the City.
- The permit may be revoked if:
    - Any false statements are made in the Floodplain Development Permit.
    - The effective Flood Insurance Rate Map has been revised.
    - The work is not done in accordance with local, state, and federal regulatory requirements.
    - The work is different than what is described and submitted to the City as part of the Floodplain Development Permit.
- If revoked, all work must cease until permit is re-issued.
    - If the permit cannot be re-issued, then the owner of the development will be responsible to correct the issue which may require removal of any development that may have occurred.
- Other applicable local, state, and federal permits must also be obtained.

7. Water Quality/Treatment Requirements

All storm water containment systems shall be designed to remove oils, greases, and any other floatable petroleum products and allow sufficient time or methods for solids to settle and remain as a storage within the containment area. Local dissolved solids of the receiving waters shall comply to state water quality requirements. All containments shall be stored to prevent impact by storm water and to contain any spilled materials on site. The location and methods of this storage shall be shown in the design plans.

8. Irrigation Canals and Systems

All irrigation canals, pipes, ditches, channels, structures, diversions, and other portions of the system shall be designed for the full range of base flows including historical maximum flows, historical minimum flows, and the full water right flow. These design flows must to be approved by the associated canal company in writing and the City Engineer.

9. Storm Water Pollution Prevention Plan

Storm water pollution prevention plans (SWPPP) are required on all projects in City boundaries and every project must comply with City standards and specifications, whether approved by the city or not. Table 1 summarizes the requirements of the SWPPP. General

Landscaping activities for project sites contained within existing SWPPP authorizations or less than 1.0 acre in size are exempt from this requirement.

Table 1 – SWPPP Requirements	
Contributing Area Size	Minimum Requirements
Less than 1.0 Acre	Erosion and sediment control plan, dust control plan, debris and garbage control plan, post construction BMPs, Inspection and maintenance plan, record keeping and training, and final stabilization. These can be on a standard design sheet as detailed notes with supporting details.
1.0 Acre and larger	A full SWPPP using the EPA template downloadable from the DWQ including all elements. Maps and figures in the document must also address construction sequence, total area of site and area to be disturbed, pre and post runoff analysis identification of receiving waters, map of drainage patterns with outfall locations and downstream flow paths, locations of structural controls, and locations of equipment and material and chemical storage, and methods of containment. Additionally, the document must include a map identifying where each BMP is to be used and provide details for the implementation of the BMPs.

K. Construction Checklist:

All developments shall complete the North Logan City Developmental Construction Checklist prior to approval from the City.

Developmental Construction Checklist:	INSPECTOR:	DATE:	COMMENTS:

Name of Development:

Developer Name(s):

Developer Mobile Phone #:

Developer Email:

General Contractor Name:
General Contractor Mobile Phone#:
General Contractor Email:

Project Manager Name:

Project Manager Mobile Phone#:

Project Manager Email:

Design Engineer Name:
Design Engineer Mobile Phone#:
Design Engineer Email:

Site Engineer (Compaction Tests...etc.) Name:
Site Engineer Mobile Phone#:
Site Engineer Email:

SWPPP Contact Name:
SWPPP Contact Mobile Phone#:
SWPPP Contact Email:

Before Pre-Con Meeting			
Final Plans:			
Total Impervious Surface Calculated and submitted to City (only applies to commercial, industrial, research and manufacturing, and institutional)			
Submit total square footage to City. This is then divided by ERU calc. to determine monthly stormwater fee.			
SWPPP Submitted and Approved and Associated Fees Paid			
Stormwater NOI (permit) submitted to City (and State).			
Fugitive Dust Control Plan			

Contractor has set of plans approved and signed by City (Electronic Copies also Submitted)			
SAID Agreement Completed and Signed.			
Fees paid to the City for Signage Costs and Initial Surface Treatment			
Construction Schedule (Estimated Timeline for Completion of each of the three parts of this checklist) submitted by General Contractor			
Subdivision Development Agreement Prepared for Pre-Construction Meeting (General Construction Agreement Containing Estimated dates for completion of construction, Bonding Amounts, Along with Required Attachments (Construction Checklist Signed, Cost Estimate of all infrastructure improvements, Security Documents - Estimated Schedule of Construction).			

Pre-Construction Conference:			
Meeting held with developer. Developer shall schedule this meeting with the City and shall include all contractors, utility companies, and representatives from the City's Public Works and Community Development Departments.			
All contractors have in their possession an approved set of drawings.			
Roll and Contact Sheet Signed			
Subdivision improvement breakdown sheet, and blank copy of bond release request sheet distributed at meeting			

Staking and Layout of Sub-grade:			
Stormwater BMP's installed and approved			Before any dirt is moved, the BMP's need to be installed, along with a SWPPP information board at the entrance to the Subdivision (the says "SWPPP" for questions please contact "Name of Contractor and Cell Phone Number".

			QR code for inspection
Cuts and fills staked			
Excavations and fills to appropriate subgrade			
Proctor density measured			
Sub-grade scarified and recompacted			
Sub-grade material acceptable			

Sewer Line Material :			
Material verification (fittings, pipes..etc.) before installation			
Manhole troughs verified to contain proper slope			
All sewer lines shall have at least a three inches of 1" minus rock surrounding each pipe.			
Trench backfill compaction for mainlines, AND LATERALS to the extent of the City's easements and rights of way (generally 1' beyond sidewalk). A 100' test area shall be tested at one-foot lift intervals the full depth of the trench and shall be accomplished in the presence of City staff. This section shall be used to establish the required compactive effort to reach proper compaction. The trench backfill shall then be periodically tested at changes in soil type, or not to exceed a distance of 250' of trench length at one-foot lifts to verify the compactive effort.			
All sewer mainlines (and laterals) include a tracer wire.			
Warning Tape installed 1 foot above all lines			
Manhole inspection. Ladders in good condition, joints grouted, sections sealed, troughs cut properly and cleaned,..etc.			
Hydrostatic or air tests (5 psi for 5 minutes) taken and witnessed by City staff			
Video inspection of all pipelines, copy of video placed in subdivision file, and digitally saved in subdivision folder			
Sewer main lines madrell tested for deflection			

All laterals installed and marked with physical markers and GPS point taken at location of physical marker for final as built drawings (note: if sewer laterals exceed 50% of the size of the mainline a manhole must be installed).			

Water Line Material:			
Material verification (fittings, pipes..etc.) before installation			
All water lines shall have at least a three inches of 1" minus rock surrounding each pipe.			
Mainline material should be ductile iron unless approved otherwise by City staff (if PVC is installed it must include a tracer wire).			
Trench Backfill Compaction for all mainlines, and SERVICE LINES to the extent of the City's easements and rights of way (generally to the meter barrel). A 100' test area shall be tested at one foot lift intervals the full depth of the trench and shall be accomplished in the presence of City staff. This section shall be used to establish the required compactive effort to reach proper compaction. The trench backfill shall then be periodically tested at changes in soil type, or not to exceed a distance of 250' of trench length at one-foot lifts to verify the compactive effort.			
Verification that lines have been flushed out			
Verify Service lines are connected and operational to setter.			
Disinfection tests (Two bacteriological samples taken 24 hours apart for each 300' length of line. Samples must be submitted to the Bear River Health Department, and the results submitted to City staff.)			
Hydrostatic or air tests taken (200 psi for 2 hours). Or per pipe man. specs			
Barrels and setters installed properly. Setters shall not exceed four feet and not less than three-feet below finished grade elevation. Five-foot (minimum length) barrels shall be used in all cases. (Note: Barrels cannot be installed in existing, or future, concrete or asphalt, or in a stormwater basin.) Must be ADS pipe.			

Secondary Water Line Material:			
Material verification (fittings, pipes..etc.) before installation. Pink pigment			
Tracer wire installed following all pipes			
Warning tape installed			
Sleeved under all public rights of way			
Pressure tests per pipe manufactures spec			
Backfilled and compacted			
Signature of acceptance by secondary water provider			

Storm Drainage Systems:			
Material verification for all storm drain system prior to installation.			
Drop boxes and associated grates installed at proper location and elevation following compaction standards			
Proper line installation. All joints installed correctly with proper slope, drop boxes grouted and sealed.			
All stormwater lines shall have at least a three inches of 1" minus rock surrounding each pipe.			
Trench Backfill Compaction for all stormwater pipes and underground features. A 100' test area shall be tested at one foot lift intervals the full depth of the trench and shall be accomplished in the presence of City staff. This section shall be used to establish the required compactive effort to reach proper compaction. The trench backfill shall then be periodically tested at changes in soil type, or not to exceed a distance of 250' of trench length at one-foot lifts to verify the compactive effort.			
Hydrostatic or Air Tests (5 psi for 5 minutes) of all pipelines			
Video inspection of all pipelines, copy of video placed in subdivision file, and digitally saved in subdivision folder			
~~Restrictor plates installed correctly.~~			
Proper installation of curb flow line , and curb cuts (where applicable)			
Detention, retention, catch basins, debris basins, park strip swales, general swales, and other stormwater storage/conveyance features inspected for proper size, capacity, location on site, and grading.			
Mandrell test			

Utility Finalization:			
All utilities (water, sewer, stormwater, gas, power, cable, communication lines, and street lights) within street section are installed properly with the proper backfill compaction methods, and in the proper location (or easement) and approved			
All service laterals are installed and located on parcels with physical markers, capped, and GPS location taken and submitted by design engineer.			
All water service lines, meter barrels/setters are located in proper locations (if meter barrels are located in a stormwater basin, or in concrete/asphalt they will need to be moved).			
All underground and under-roadway drainage systems are installed and approved			
All backfill compaction tests have been submitted and approved			
All air tests have been submitted and approved.			
Video inspections have been reviewed and approved			
All water samples have been submitted to the Bear River Health Department and the results have been verified by City staff.			
All inspection completed by General Contractor and North Logan City staff.			

Roadway and Street Sections:			
Roadway and Street Sections shall be installed in the order shown herein. No Work shall be performed until all utilities under the roadway section (R.O.W section) are completed and approved.			

Initial Base Courses:			
Granular barrow (pit run) installed at the required width, length, and depth			
Determination of proctor density by Design Engineer.			
All base course compaction tests shall be taken at the locations specified herein as directed by the City's Public Works department			

Compaction tests for granular borrow submitted. Ensure one test required for each lane width and under curb and gutter, to be taken at 250' intervals of project length, with a minimum of four tests on any project. Lane widths are left/center/right/etc. as defined by street cross section width.			

Concrete Curb and Gutter:			
Compaction test results from authorized testing agency have been submitted and approved by City staff for the initial base courses.			
Curb and gutter stakes set and checked for proper location and alignment.			
Curb and gutter forms set and approved for location			
Drainage boxes verified and approved.			
Drive approaches identified. Any approaches not installed at the time of installation of the curb and gutter shall be saw-cut under the direction of City staff when those approaches are to be installed.			
Testing agency has contacted City staff for testing procedures prior to first day's pour			

Concrete Delivery:			
Compressive strength cylinder tests taken and approved. One test required for every 50 cubic yards or one test for each day's pour - if less than 50 cubic yards (minimum 4,000 psi 7 Day STR rating, and 6.5 bag (minimum) mix.			
Slump tests (no greater than 3" slump) taken and approved. Results shall be as specified in the DSTM, or the load shall be rejected.			
Air entrainment test taken and approved. Results shall be as specified in the DSTM (must fall between 5&7%), or load shall be rejected.			
Concrete ruled every ten feet.			
Drainage boxes finished to proper grade with bicycle-safe grates as specified by City staff (hooded grates may be required as specified by City staff).			
Green concrete surfaces sprayed with approved curing/seal compound			

Sidewalks:

Subgrade compacted. One test for each 250' of sidewalk length.			
Testing agency has contacted City staff for testing procedures prior to first day's pour			
Sidewalk location verified.			
Four inches of compacted crushed rock verified.			
Sidewalk slopes verified once forms are set prior to concrete placement (see DSTM)			
Expansion joints placed every 100' and ruled every five feet.			
Compressive strength cylinder tests taken and approved. One test required for every 50 cubic yards or one test for each day's pour - if less than 50 cubic yards (minimum 4,000 psi 7 Day STR rating, and 6.5 bag (minimum) mix.			
Slump tests (no greater than 3" slump) taken and approved. Results shall be as specified in the DSTM, or the load shall be rejected.			
Air entrainment test taken and approved. Results shall be as specified in the DSTM (must fall between 5&7%), or load shall be rejected.			
Install all required street signage per development plan.			

Final Grading and Cleanup:			
Backfill with topsoil between curb and sidewalk (maintaining swale where applicable)			
Backfill with topsoil behind sidewalk and grade slope.			
All construction debris cleaned up, including excess concrete dumps and washouts, curb cuts, debris piles, excess fill piles, especially in the City's rights of way and dirt tracked into the street.			
Jet sewer lines and clean all manholes.			
Jet all stormwater lines and clean out drop boxes.			
Sweep all asphalt, curb and gutters, and sidewalks.			
Final grading of basins, common areas, park strips, and open areas.			
All landscaping of open areas is complete (this needs to be done before development is signed off or before the development of an additional phase may commence)			

Site stabilized according to SWPPP (100% coverage with 70% density. If site is not stabilized, then stormwater BMP's must remain in place and the SWPPP must not be transferred or terminated until the City deems appropriate.)			
All plan changes have been submitted to Design Engineer for As-Built plan revisions			

Drainage Facilities:			
Compaction test results from authorized testing agency have been submitted and approved by City staff for the initial base courses.			
All drainage piping connects at curb boxes as designed.			
Cross-drains are a minimum of five feet wide.			
Inspector verifies cross-drains have a maximum 1.5' depth prior to laying concrete.			
Inspector verifies cross-drains contain three each number five (#5) epoxy coated reinforcing steel bars placed three inches above the ground. Lap splices shall be a minimum of 15".			
Green concrete surfaces sprayed with approved curing/seal compound.			

Final Base Courses:			
Slump and air-entrainment tests results from authorized testing agency submitted and approved. Cylinder tests shall be submitted upon break requirements.			
Determination of proctor density by Design Engineer.			
Crushed gravel (untreated base 3/4" max. gradation) installed at required depth and compacted.			
Compaction tests for crushed gravel submitted. One test required for each lane width, and sidewalk, to be taken at 250' intervals of project length, with a minimum of eight tests on any project. Lane widths are left/center/right/etc. as defined by street cross section width.			
Proctor verification on materials submitted with all compaction tests.			

Surface Course:

Compaction test results from authorized testing agency have been submitted and approved by the City Public Works department for the final base courses.			
Allowed up to 15% by weight of RAP or binder, whichever is lesser, with no change in specified binder grade. APWA			
Street gradient and slope checked and approved prior to any asphalt being delivered to project by city staff			
Marshall density determined by Design Engineer (1,200 lb min.)			
Asphalt materials are 3/4" max. gradation.			
Road base verified by City staff to be ready for asphalt (base surface temperatures must be above 50 degrees fahrenheit in order to lay asphalt)			
Marshall and density tests submitted on asphalt.			
Manholes, valves, etc. raised to appropriate height.			
Asphalt laid to required depth.			
Asphalt poured 1/2" above, and over, toe edge of curb.			

Street Lights:			
Materials approved prior to installation			
Locations staked and approved			
Installation methods approved			
Approval and powered by RMP.			

Final Grading and Cleanup:			
Backfill with topsoil between curb and sidewalk (maintaining swale where applicable)			
Backfill with topsoil behind sidewalk and grade slope.			
All construction debris cleaned up, including excess concrete dumps and washouts, curb cuts, debris piles, excess fill piles, especially in the City's rights of way and dirt tracked into the street.			
Jet sewer lines and clean all manholes.			
Jet all stormwater lines and clean out drop boxes.			
Sweep all asphalt, curb and gutters, and sidewalks.			
Final grading of basins, common areas, park strips, and open areas.			

All landscaping of open areas is complete (this needs to be done before development is signed off or before the development of an additional phase may commence)			
Site stabilized according to SWPPP (100% coverage with 70% density. If site is not stabilized, then stormwater BMP's must remain in place and the SWPPP must not be transferred or terminated until the City deems appropriate.)			
All plan changes have been submitted to Design Engineer for As-Built plan revisions			

Final Approval and Acceptance:			
All lot corners monument if removed by construction activities.			
As built plans, drawings, exhibits, and specifications submitted in plan, booklet, and electronic format (ACAD & PDF) to City staff. These as-builts drawings need to include locations of water service lines and sewer laterals.			
Letter of acceptance signed by City staff given to developer.			

Building Permits May be Issued

One Year Warranty Final (10%) Bond Release			
At the request of developer final release inspection can take place no sooner that one year after approval and acceptance letter			
Inspection and Verification of infrastructure			
Acceptance by City Council			
Overall Acceptance of Items			

It is understood that any/all improvements that are not inspected by a North Logan City Staff member, and that cannot be verified, are subject to removal, or replacement by the developer at the discretion of the City.

It is also understood and agreed that all construction shall follow the standards set forth in the North Logan Design Standards Technical Manual and this associated checklist, and that construction can be halted by a representative of North Logan City at any time for failure to comply with the provisions of the Design Standards Technical Manual Subdivision Ordinance or the orderly progression required by ordinance and this construction checklist.

It is also understood and agreed that the Developer and General Contractor shall ensure that all contractors, sub-contractors, employees, or general public that enter the development site shall abide by all OSHA standards, Federal and State drinking water and wastewater standards, State stormwater standards, and North Logan City safety standards.

INDEX TO SHEETS

SHEET No.	SHEET TITLE
A-0	INDEX TO STANDARD DRAWINGS
A-1	RURAL ROAD OPTION No. 1
A-2	60' STREET CROSS SECTION
A-3.1	66' STREET CROSS SECTION
A-3.2	66' STREET CROSS SECTION
A-3.3	66' STREET CROSS SECTION
A-3.4	66' STREET CROSS SECTION
A-4	66' STREET CROSS SECTION HALF WIDTH IMPROVEMENTS
A-5	80' STREET CROSS SECTION
A-6	TRAILS CROSS SECTION
A-7	INTERSECTION & UTILITY LAYOUT
A-8	JUNCTION BOX LOCATION LAYOUT
ST-1	TYPE 'A' HIGH BACK CURB & GUTTER
ST-2	TAPERED CURB END
ST-3	CONCRETE CURB EDGE
ST-4	MARICOPA EDGE
ST-5	6-FT WATERWAY
ST-6	PAVEMENT EDGE
ST-7	CONCRETE SIDEWALK
ST-8	CURB CUT
ST-9	CONCRETE CONTROL JOINTS
ST-10	CONVENTIONAL DRIVEWAY
ST-11	LOW IMPACT DRIVEWAY
ST-12	6-FT FENCE
ST-13	FENCE AT INTERSECTION
ST-14	OPEN FACE CURB INLET
ST-15	STREET MONUMENT
TR-1	UTILITY TRENCH
TR-2	ROADWAY REPAIR

INDEX TO SHEETS

SHEET No.	SHEET TITLE
CW-1	FIRE HYDRANT
CW-2	WATER VALVE
CW-3	WATER VALVE CONCRETE COLLAR
CW-4	WATER METER
CW-5	2-IN AND LARGER WATER METER
CW-6	THRUST BLOCKS
CW-7	THRUST BLOCKS TABLES
CW-8	RESTRAINED JOINTS
CW-9	RESTRAINED JOINTS TABLES
SS-1	SANITARY SEWER MANHOLE
SS-2	CONCRETE MANHOLE COLLAR
SS-3	SANITARY SEWER CONNECTION

DRAWING NOT TO SCALE

PREPARED BY: JONES AND DEMILLE ENGINEERING, INC.

NORTH LOGAN CITY STANDARD DRAWING

NORTH LOGAN CITY
2525 N 600 E
NORTH LOGAN, UT 84341
(435) 752-1310
northlogancity.org

INDEX TO STANDARD DRAWINGS

UPDATED: 1/16/2024

STANDARD DRAWING No.
A-0

APPROVED:
DATE: -- BY: --

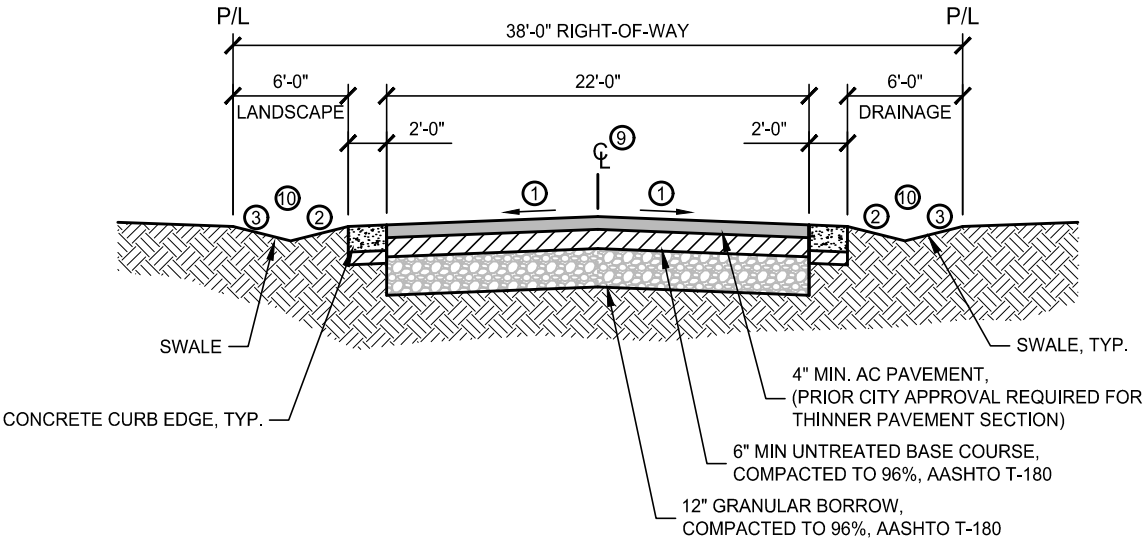

RURAL ROAD OPTION No. 1

NOTES:

1. 2% - 4% CROSS SLOPE
2. FORESLOPE: 4:1
3. BACKSLOPE: 3:1 MAX.
   8:1 MIN.
4. THESE STREETS CAN SERVICE UP TO 25 RESIDENCES WITH A DESIGN SPEED OF 15 MPH, WITH A RECOMMENDED SPEED LIMIT OF 15 MPH.
5. NO STREET PARKING ALLOWED.
6. NO TURF LAWN ALLOWED IN PARK STRIP.
7. STREET TREES REQUIRED IN ALL PARK STRIPS.
8. THIS ROAD OPTION MAY ONLY BE USED FOR EXISTING RURAL ROADWAYS. THE RURAL ROADWAY OPTION MAY NOT BE USED FOR ANY NEW ROAD CONSTRUCTION, INSTALLING OR IMPROVEMENTS.
9. 6% MAX. PROFILE GRADE AT CENTERLINE (PRIOR CITY APPROVAL REQUIRED FOR STEEPER PROFILE GRADE)
10. 2" MIN. ROCK SIZE IN LOW IMPACT SWALE

DRAWING NOT TO SCALE

PREPARED BY: JONES AND DEMILLE ENGINEERING, INC.

NORTH LOGAN CITY STANDARD DRAWING

NORTH LOGAN CITY 2525 N 600 E NORTH LOGAN, UT 84341 (435) 752-1310 northlogancity.org	RURAL ROAD OPTION No. 1 UPDATED: 1/16/2024	STANDARD DRAWING No. A-1 APPROVED: DATE: -- BY: --

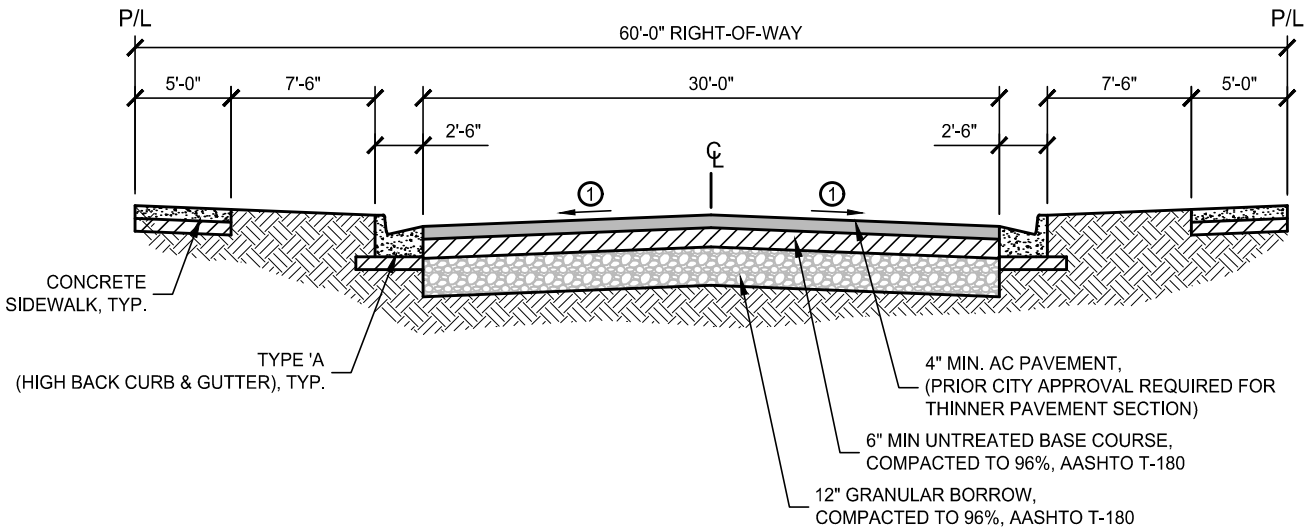

60' CONVENTIONAL STREET

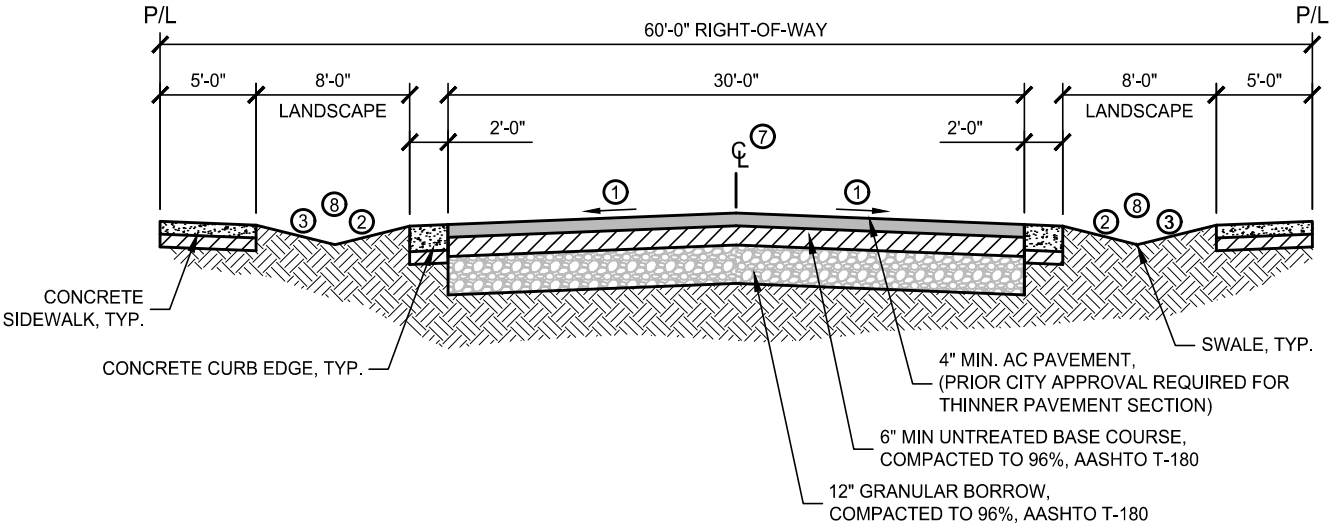

60' LOW IMPACT ROADWAY

STANDARD UNLESS OTHER CONSIDERATIONS REQUIRE A DIFFERENT TYPICAL SECTION

NOTES:

1. 2% - 4% CROSS SLOPE
2. FORESLOPE: 4:1
3. BACKSLOPE: 3:1 MAX.
   8:1 MIN.
4. THESE STREETS CAN SERVICE BETWEEN 26 - 75 RESIDENCES WITH A DESIGN SPEED OF 35 MPH.
5. NO TURF LAWN ALLOWED IN PARK STRIP.
6. STREET TREES REQUIRED IN ALL PARK STRIPS.
7. 6% MAX. PROFILE GRADE AT CENTERLINE FOR LOW IMPACT ROADWAY.
   (PRIOR CITY APPROVAL REQUIRED FOR STEEPER PROFILE GRADE)
8. 2" MIN. ROCK SIZE IN LOW IMPACT SWALE

DRAWING NOT TO SCALE

PREPARED BY: JONES AND DEMILLE ENGINEERING, INC.

NORTH LOGAN CITY STANDARD DRAWING

NORTH LOGAN CITY
2525 N 600 E
NORTH LOGAN, UT 84341
(435) 752-1310
northlogancity.org

60' STREET CROSS SECTION

UPDATED: 1/16/2024

STANDARD DRAWING No.
A-2
APPROVED:
DATE: -- BY: --

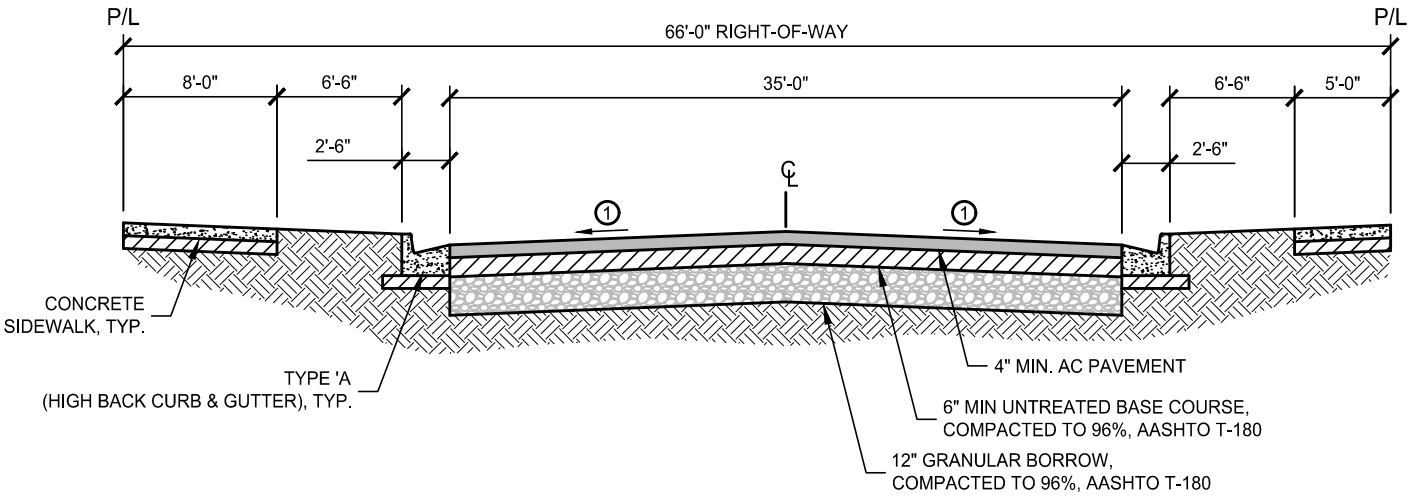

66' CONVENTIONAL STREET

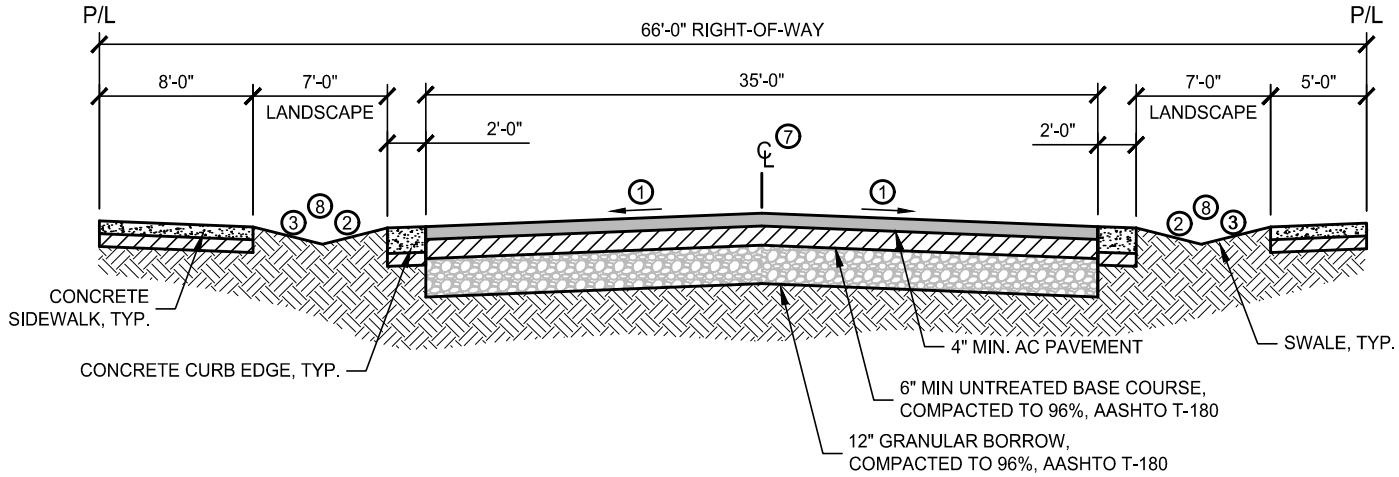

66' LOW IMPACT ROADWAY

STANDARD UNLESS OTHER CONSIDERATIONS
REQUIRE A DIFFERENT TYPICAL SECTION

NOTES:

1. 2% - 4% CROSS SLOPE
2. FORESLOPE: 4:1
3. BACKSLOPE: 3:1 MAX.
   8:1 MIN.
4. THESE STREETS CAN SERVICE BETWEEN 26 - 75 RESIDENCES WITH A DESIGN SPEED OF 35 MPH.
5. NO TURF LAWN ALLOWED IN PARK STRIP.
6. STREET TREES REQUIRED IN ALL PARK STRIPS.
7. 6% MAX. PROFILE GRADE AT CENTERLINE FOR LOW IMPACT ROADWAY.
   (PRIOR CITY APPROVAL REQUIRED FOR STEEPER PROFILE GRADE)
8. 2" MIN. ROCK SIZE IN LOW IMPACT SWALE

DRAWING NOT TO SCALE

PREPARED BY: JONES AND DEMILLE ENGINEERING, INC.

NORTH LOGAN CITY STANDARD DRAWING

NORTH LOGAN CITY
2525 N 600 E
NORTH LOGAN, UT 84341
(435) 752-1310
northlogancity.org

66' STREET CROSS SECTION

UPDATED: 1/16/2024

STANDARD DRAWING No.
A-3.1
APPROVED:
DATE: -- BY: --

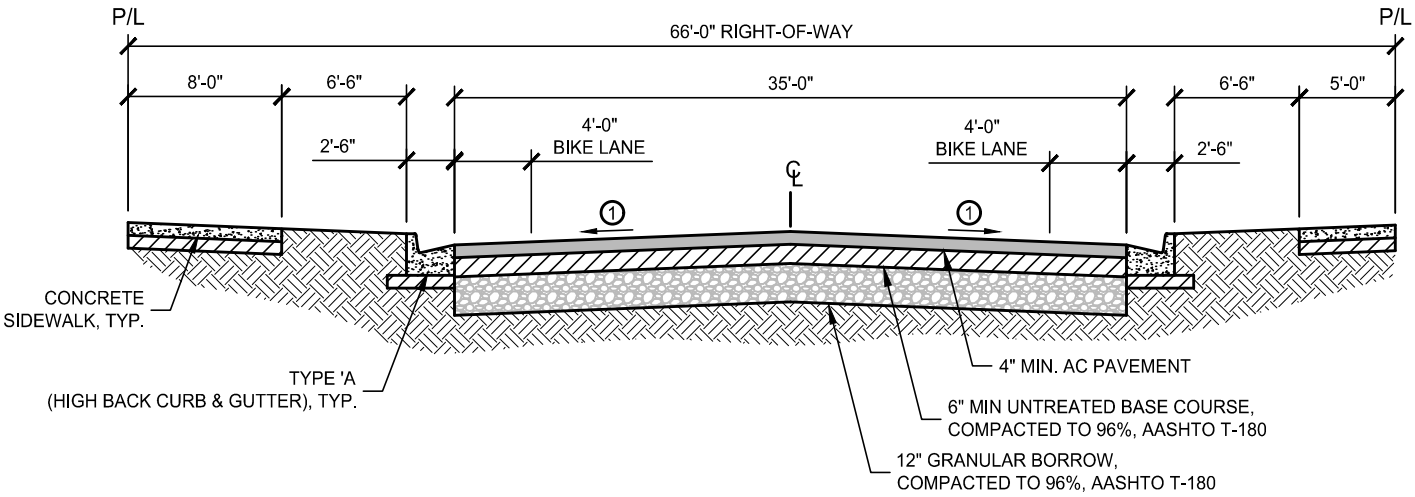

66' CONVENTIONAL STREET

(WITH 4' BIKE LANE EACH WAY)

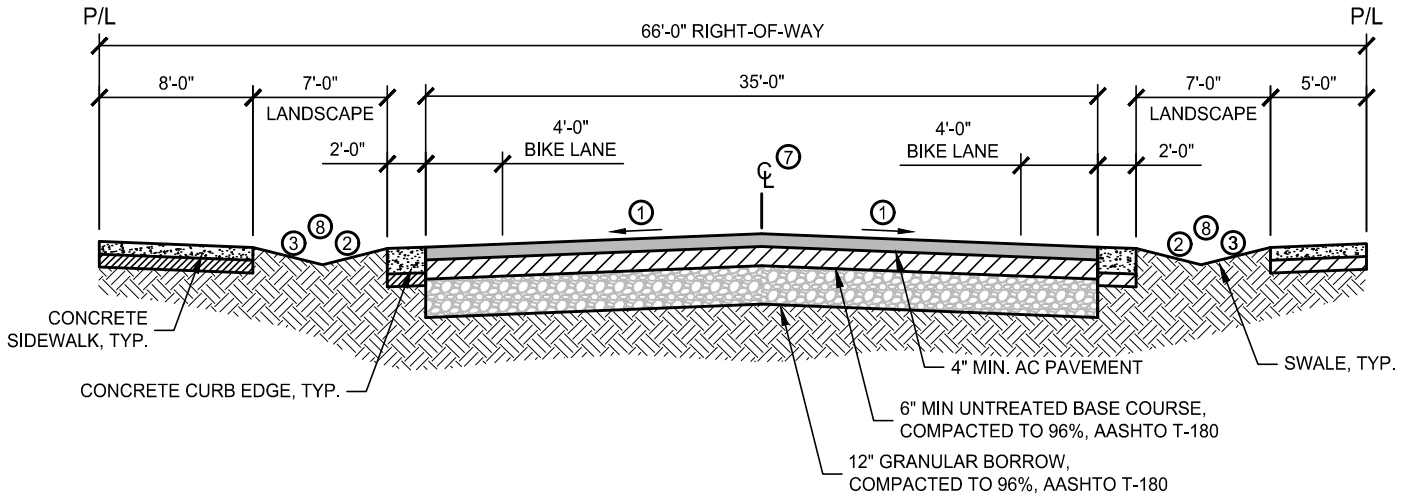

66' LOW IMPACT ROADWAY

(WITH 4' BIKE LANE EACH WAY)

NOTES:

1. 2% - 4% CROSS SLOPE
2. FORESLOPE: 4:1
3. BACKSLOPE: 3:1 MAX.
   8:1 MIN.
4. THESE STREETS CAN SERVICE BETWEEN 26 - 75 RESIDENCES WITH A DESIGN SPEED OF 35 MPH.
5. NO TURF LAWN ALLOWED IN PARK STRIP.
6. STREET TREES REQUIRED IN ALL PARK STRIPS.
7. 6% MAX. PROFILE GRADE AT CENTERLINE FOR LOW IMPACT ROADWAY.
   (PRIOR CITY APPROVAL REQUIRED FOR STEEPER PROFILE GRADE)
8. 2" MIN. ROCK SIZE IN LOW IMPACT SWALE

DRAWING NOT TO SCALE

PREPARED BY: JONES AND DEMILLE ENGINEERING, INC.

NORTH LOGAN CITY STANDARD DRAWING

NORTH LOGAN CITY
2525 N 600 E
NORTH LOGAN, UT 84341
(435) 752-1310
northlogancity.org

66' STREET CROSS SECTION

UPDATED: 1/16/2024

STANDARD DRAWING No.
A-3.2
APPROVED:
DATE: -- BY: --

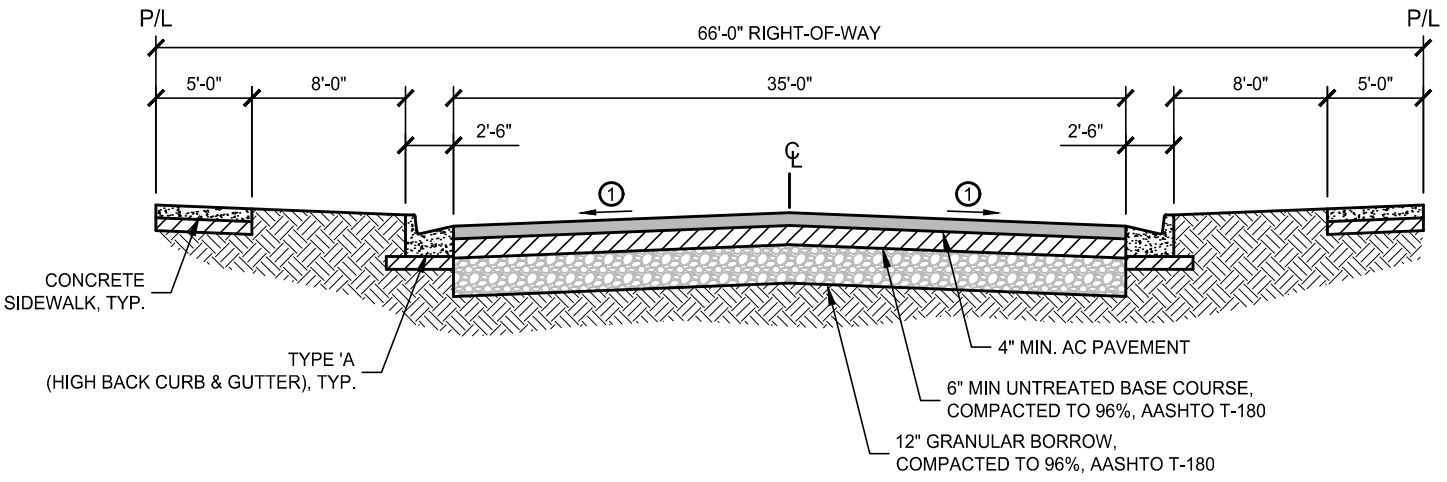

66' CONVENTIONAL STREET

WITH 5' SIDEWALK ON BOTH SIDES

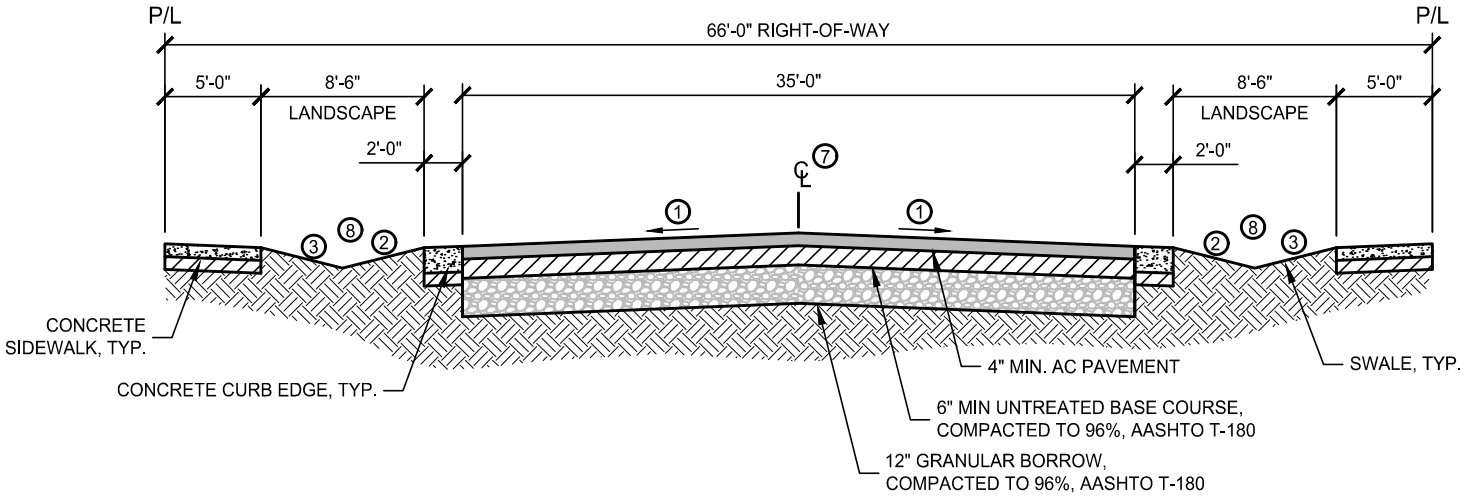

66' LOW IMPACT ROADWAY

WITH 5' SIDEWALK ON BOTH SIDES

NOTES:

1. 2% - 4% CROSS SLOPE
2. FORESLOPE: 4:1
3. BACKSLOPE: 3:1 MAX.
   8:1 MIN.
4. THESE STREETS CAN SERVICE BETWEEN 26 - 75 RESIDENCES WITH A DESIGN SPEED OF 35 MPH.
5. NO TURF LAWN ALLOWED IN PARK STRIP.
6. STREET TREES REQUIRED IN ALL PARK STRIPS.
7. 6% MAX. PROFILE GRADE AT CENTERLINE FOR LOW IMPACT ROADWAY.
   (PRIOR CITY APPROVAL REQUIRED FOR STEEPER PROFILE GRADE)
8. 2" MIN. ROCK SIZE IN LOW IMPACT SWALE

DRAWING NOT TO SCALE

PREPARED BY: JONES AND DEMILLE ENGINEERING, INC.

NORTH LOGAN CITY STANDARD DRAWING

NORTH LOGAN CITY
2525 N 600 E
NORTH LOGAN, UT 84341
(435) 752-1310
northlogancity.org

66' STREET CROSS SECTION

UPDATED: 1/16/2024

STANDARD DRAWING No.
A-3.3
APPROVED:
DATE: -- BY: --

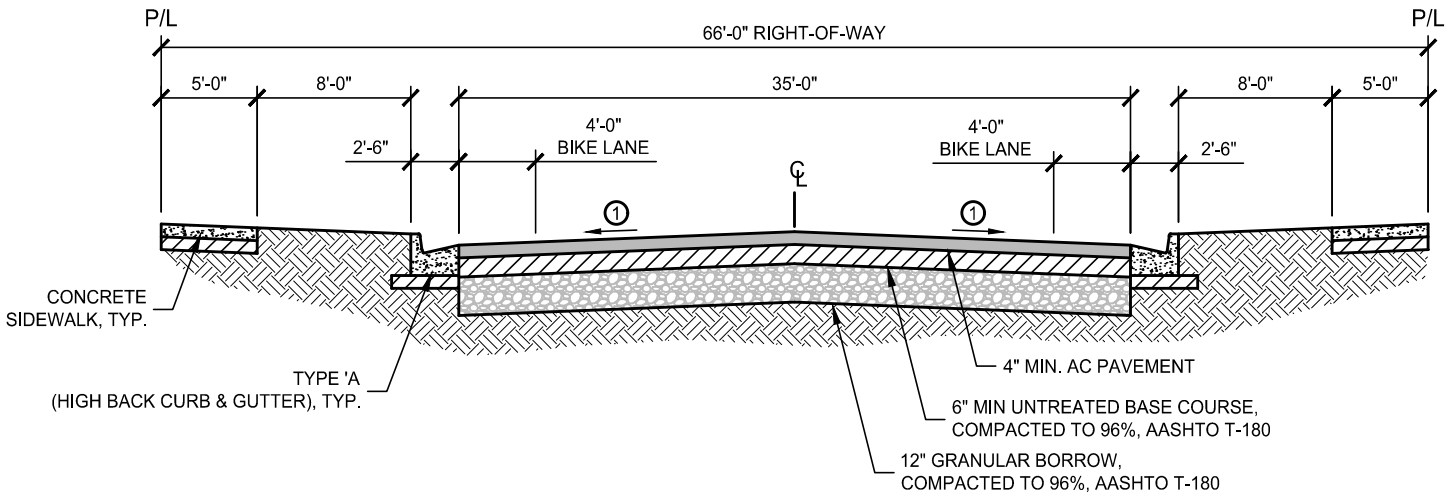

66' CONVENTIONAL STREET

WITH 5' SIDEWALK ON BOTH SIDES
(WITH 4' BIKE LANE EACH WAY)

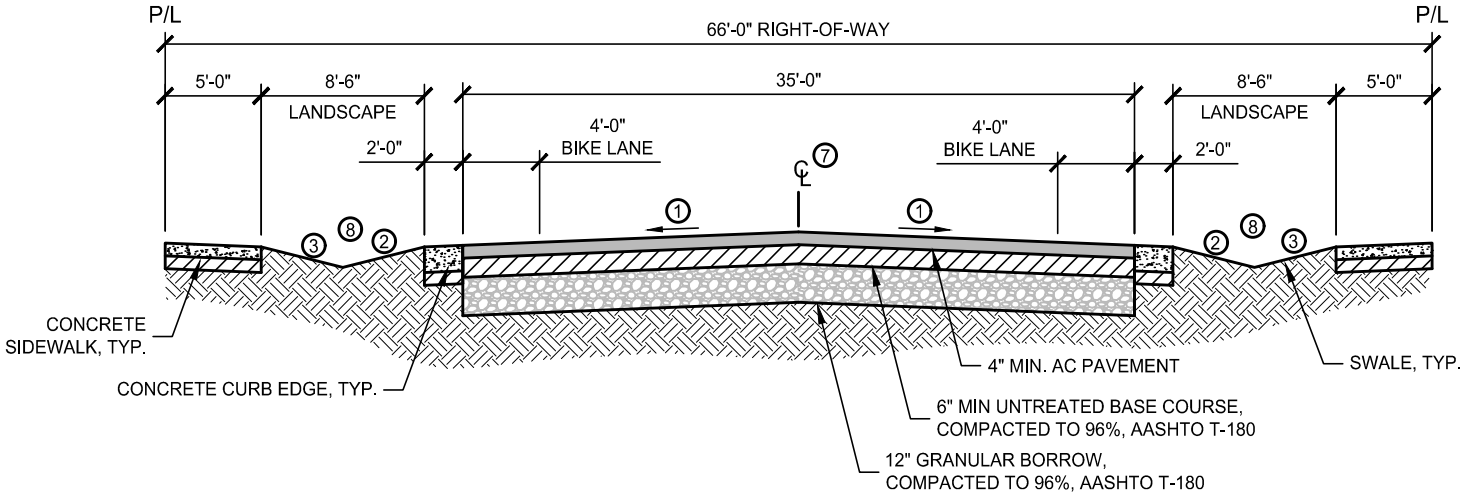

66' LOW IMPACT ROADWAY

WITH 5' SIDEWALK ON BOTH SIDES
(WITH 4' BIKE LANE EACH WAY)

NOTES:

1. 2% - 4% CROSS SLOPE
2. FORESLOPE: 4:1
3. BACKSLOPE: 3:1 MAX.
   8:1 MIN.
4. THESE STREETS CAN SERVICE BETWEEN 26 - 75 RESIDENCES WITH A DESIGN SPEED OF 35 MPH.
5. NO TURF LAWN ALLOWED IN PARK STRIP.
6. STREET TREES REQUIRED IN ALL PARK STRIPS.
7. 6% MAX. PROFILE GRADE AT CENTERLINE FOR LOW IMPACT ROADWAY.
   (PRIOR CITY APPROVAL REQUIRED FOR STEEPER PROFILE GRADE)
8. 2" MIN. ROCK SIZE IN LOW IMPACT SWALE

DRAWING NOT TO SCALE

PREPARED BY: JONES AND DEMILLE ENGINEERING, INC.

NORTH LOGAN CITY STANDARD DRAWING

NORTH LOGAN CITY
2525 N 600 E
NORTH LOGAN, UT 84341
(435) 752-1310
northlogancity.org

66' STREET CROSS SECTION

UPDATED: 1/16/2024

STANDARD DRAWING No.
A-3.4

APPROVED:
DATE: -- BY: --

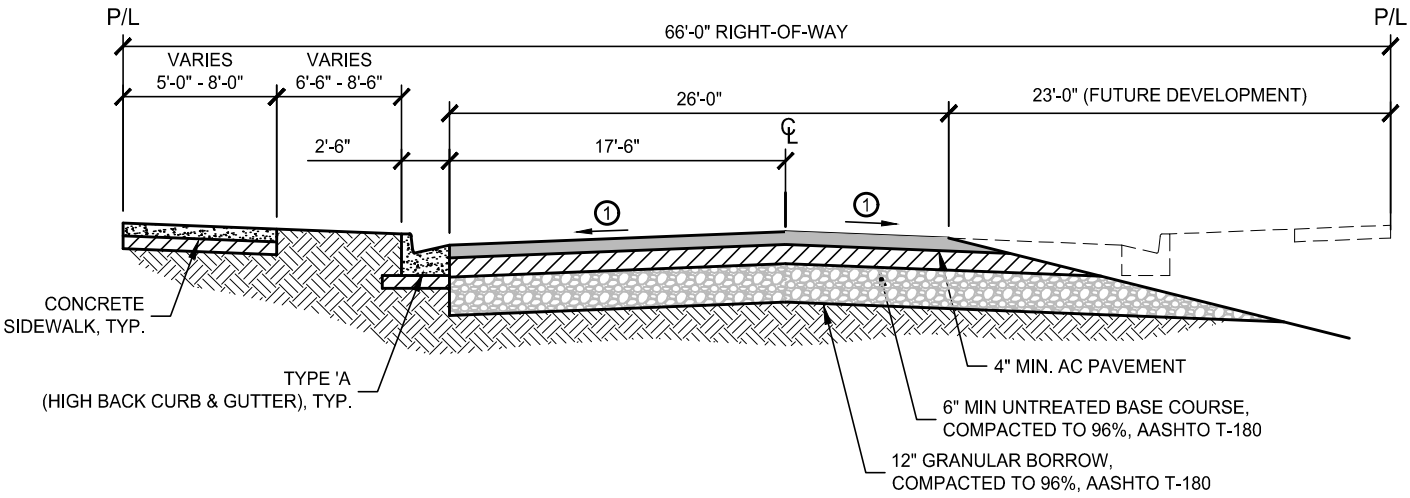

66' CONVENTIONAL STREET - HALF WIDTH

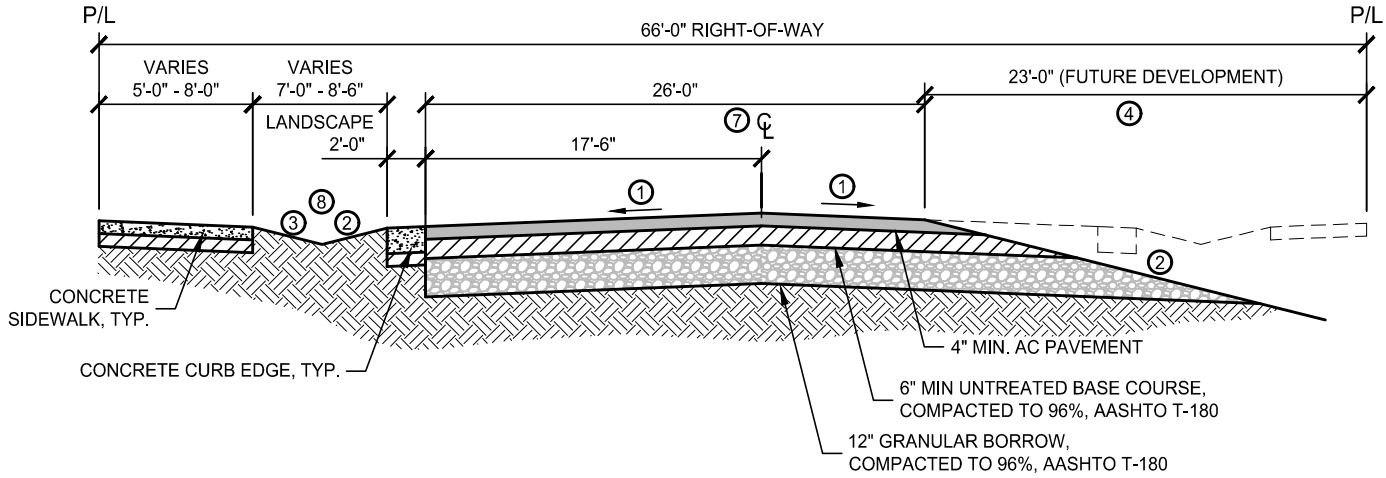

66' LOW IMPACT ROADWAY - HALF WIDTH

STANDARD UNLESS OTHER CONSIDERATIONS
REQUIRE A DIFFERENT TYPICAL SECTION

NOTES:

1. 2% - 4% CROSS SLOPE
2. FORESLOPE: 4:1
3. BACKSLOPE: 3:1 MAX.
   8:1 MIN.
4. REMOVE AND REPLACE AC PAVEMENT TO CENTERLINE WITH FUTURE DEVELOPMENT.
5. NO TURF LAWN ALLOWED IN PARK STRIP.
6. STREET TREES REQUIRED IN ALL PARK STRIPS.
7. 6% MAX. PROFILE GRADE AT CENTERLINE FOR LOW IMPACT ROADWAY.
   (PRIOR CITY APPROVAL REQUIRED FOR STEEPER PROFILE GRADE)
8. 2" MIN. ROCK SIZE IN LOW IMPACT SWALE

DRAWING NOT TO SCALE

PREPARED BY: JONES AND DEMILLE ENGINEERING, INC.

NORTH LOGAN CITY STANDARD DRAWING

NORTH LOGAN CITY
2525 N 600 E
NORTH LOGAN, UT 84341
(435) 752-1310
northlogancity.org

66' STREET CROSS SECTION
HALF WIDTH IMPROVEMENTS

UPDATED: 1/16/2024

STANDARD DRAWING No.
A-4
APPROVED:
DATE: -- BY: --

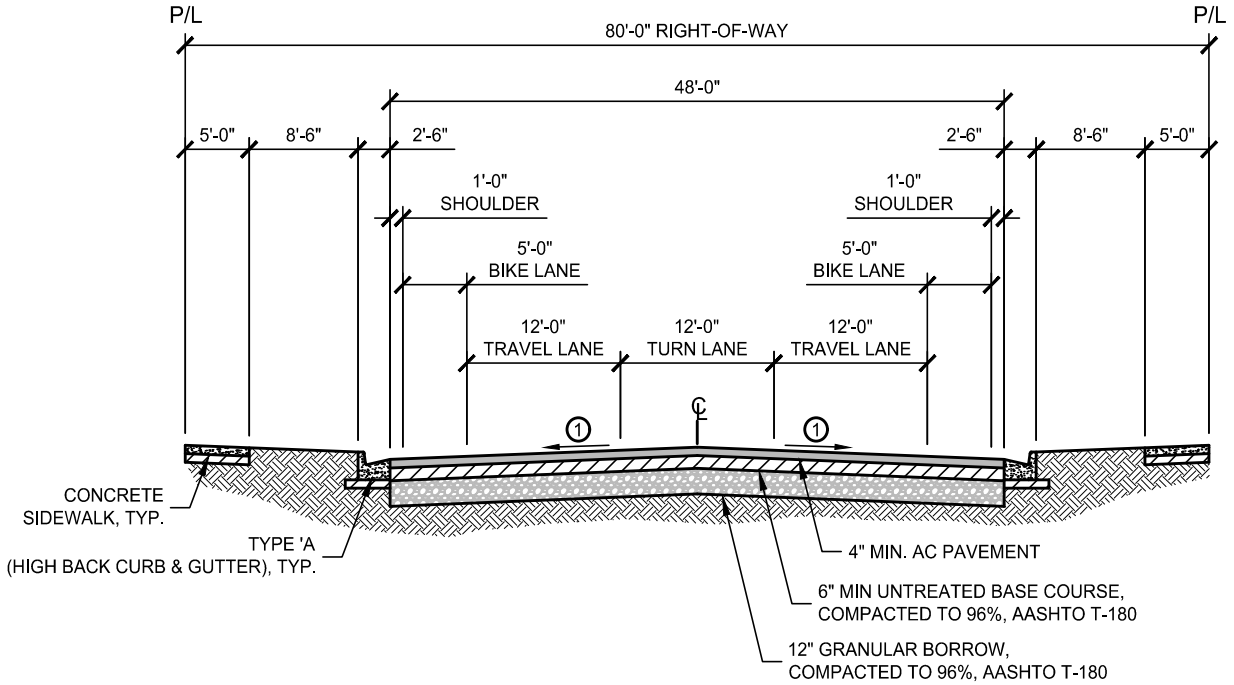

80' CONVENTIONAL STREET

NOTES:

1. 2% - 4% CROSS SLOPE
2. NO TURF LAWN ALLOWED IN PARK STRIP.
3. STREET TREES REQUIRED IN ALL PARK STRIPS.

DRAWING NOT TO SCALE

PREPARED BY: JONES AND DEMILLE ENGINEERING, INC.

NORTH LOGAN CITY STANDARD DRAWING

NORTH LOGAN CITY
2525 N 600 E
NORTH LOGAN, UT 84341
(435) 752-1310
northlogancity.org

80' STREET CROSS SECTION

UPDATED: 1/16/2024

STANDARD DRAWING No.
A-5
APPROVED:
DATE: -- BY: --

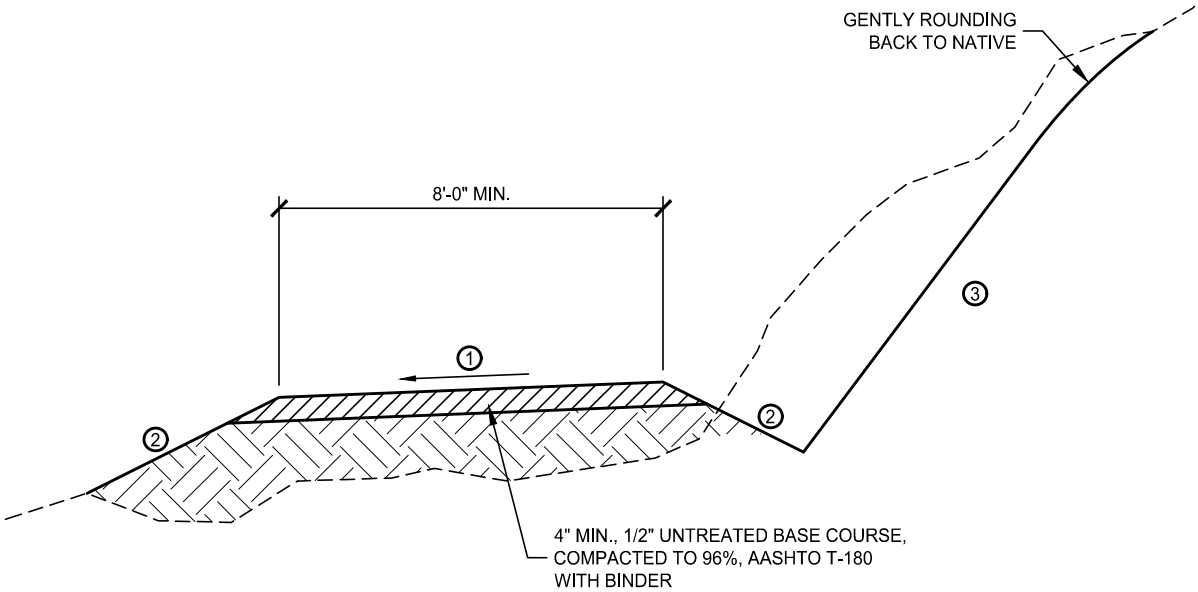

NOTES:
1. 2% - 4% CROSS SLOPE
2. FORESLOPE: 4:1
3. BACKSLOPE: 2:1 MAX.

BONNEVILLE SHORELINE TRAIL

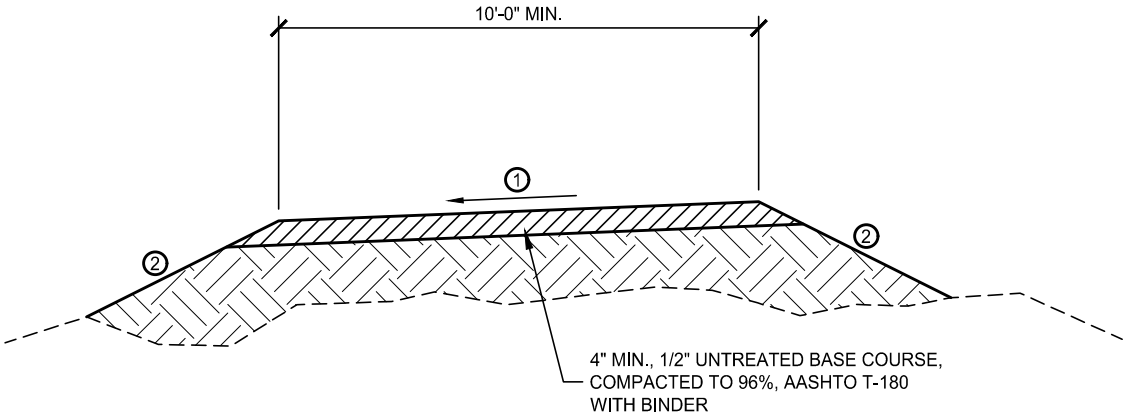

NOTES:
1. 2% - 4% CROSS SLOPE
2. FORESLOPE: 4:1

CANAL TRAIL

DRAWING NOT TO SCALE

PREPARED BY: JONES AND DEMILLE ENGINEERING, INC.

NORTH LOGAN CITY STANDARD DRAWING

NORTH LOGAN CITY
2525 N 600 E
NORTH LOGAN, UT 84341
(435) 752-1310
northlogancity.org

TRAILS CROSS SECTION

UPDATED: 1/16/2024

STANDARD DRAWING No.
A-6
APPROVED:
DATE: -- BY: --

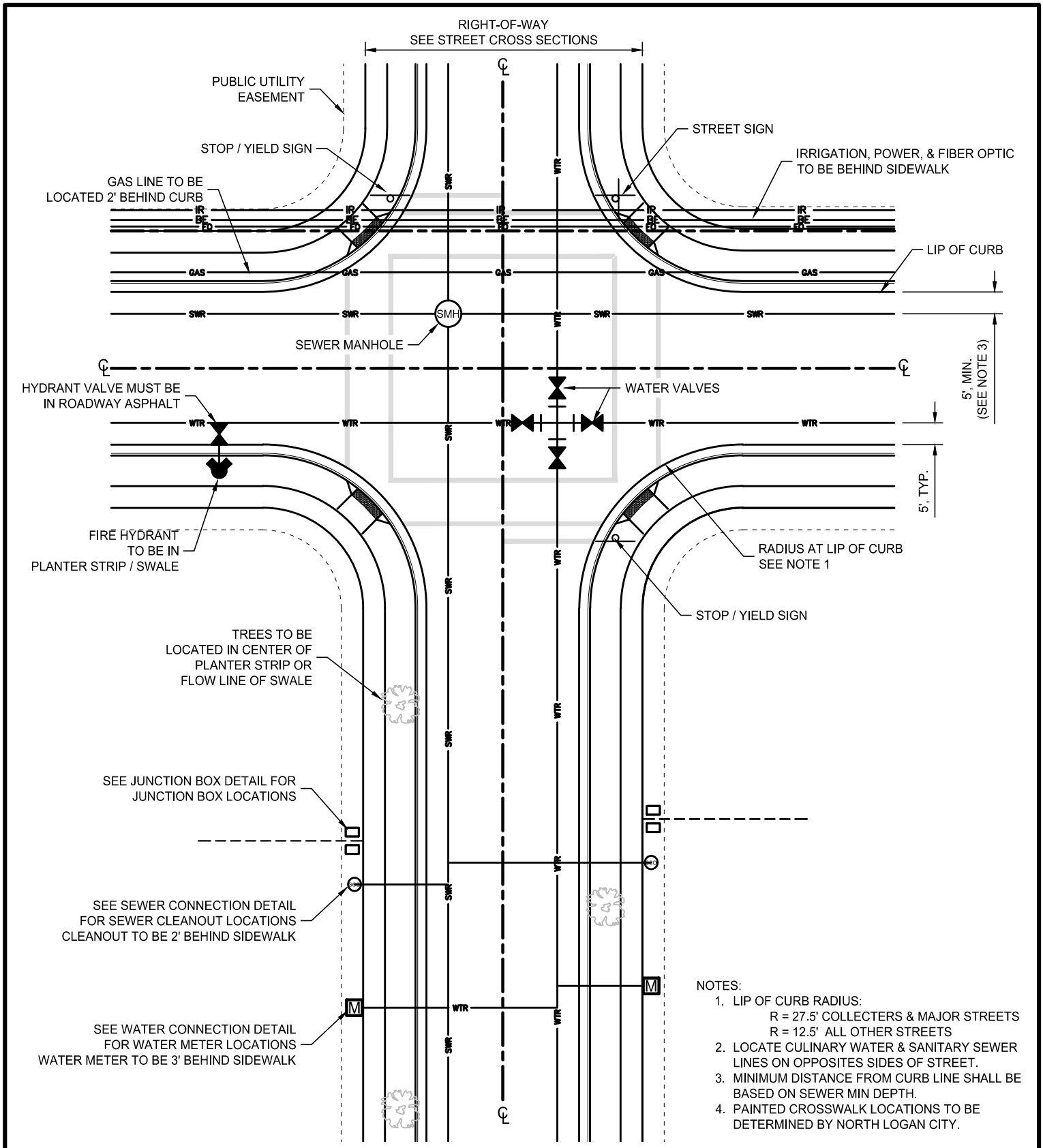

NOTES:

1. LIP OF CURB RADIUS:
   R = 27.5' COLLECTERS & MAJOR STREETS
   R = 12.5' ALL OTHER STREETS
2. LOCATE CULINARY WATER & SANITARY SEWER LINES ON OPPOSITES SIDES OF STREET.
3. MINIMUM DISTANCE FROM CURB LINE SHALL BE BASED ON SEWER MIN DEPTH.
4. PAINTED CROSSWALK LOCATIONS TO BE DETERMINED BY NORTH LOGAN CITY.

DRAWING NOT TO SCALE

PREPARED BY: JONES AND DEMILLE ENGINEERING, INC.

NORTH LOGAN CITY STANDARD DRAWING

NORTH LOGAN CITY
2525 N 600 E
NORTH LOGAN, UT 84341
(435) 752-1310
northlogancity.org

INTERSECTION & UTILITY LAYOUT

UPDATED: 1/16/2024

STANDARD DRAWING No.
A-7

APPROVED:
DATE: -- BY: --

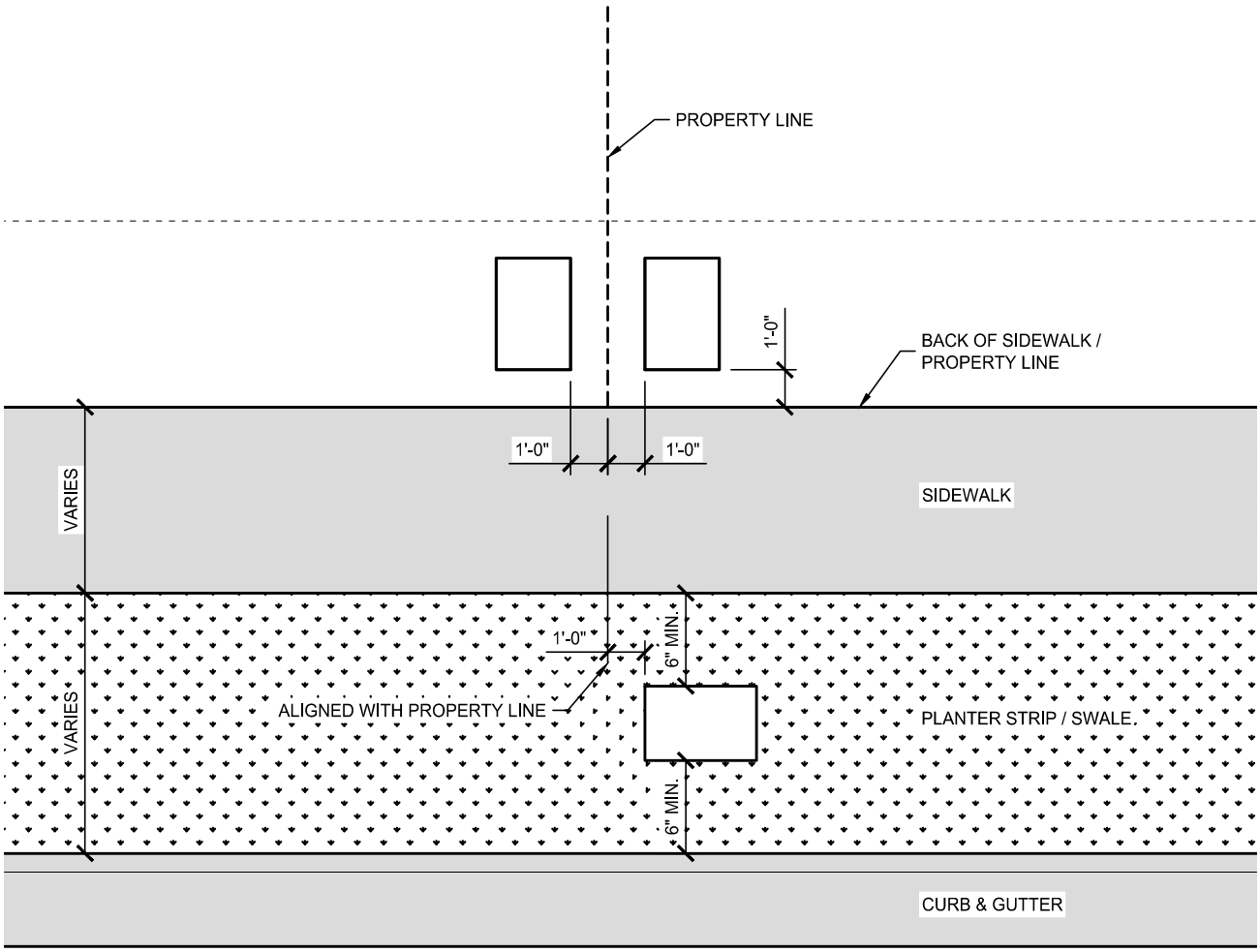

NOTE:
JUNCTION BOX MUST BE APPROVED OR
PROVIDED BY ROCKY MOUNTAIN POWER.

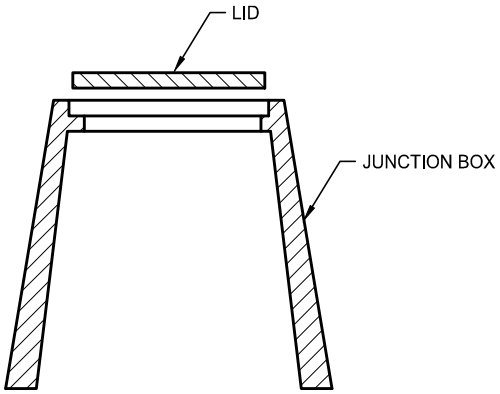

DRAWING NOT TO SCALE

PREPARED BY: JONES AND DEMILLE ENGINEERING, INC.

NORTH LOGAN CITY STANDARD DRAWING

NORTH LOGAN CITY
2525 N 600 E
NORTH LOGAN, UT 84341
(435) 752-1310
northlogancity.org

JUNCTION BOX LOCATION LAYOUT

UPDATED: 1/16/2024

STANDARD DRAWING No.
A-8
APPROVED:
DATE: -- BY: --

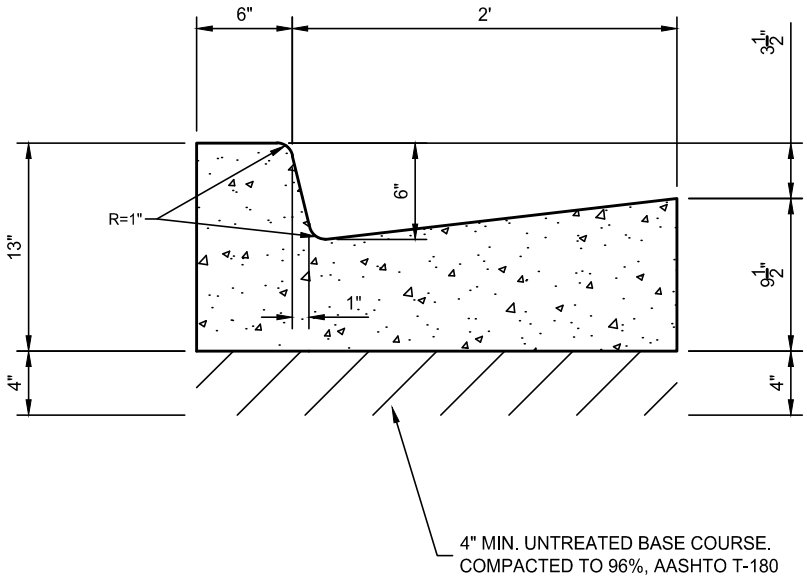

STANDARD CURB

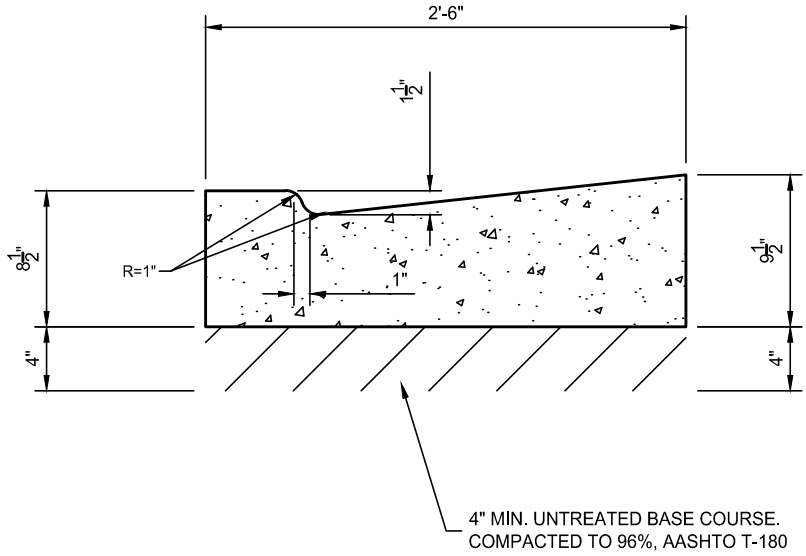

DRIVE DEPRESSION CURB

DRAWING NOT TO SCALE

PREPARED BY: JONES AND DEMILLE ENGINEERING, INC.

NORTH LOGAN CITY STANDARD DRAWING

NORTH LOGAN CITY
2525 N 600 E
NORTH LOGAN, UT 84341
(435) 752-1310
northlogancity.org

TYPE 'A' HIGH BACK CURB & GUTTER

UPDATED: 1/16/2024

STANDARD DRAWING No.
ST-1
APPROVED:
DATE: -- BY: --

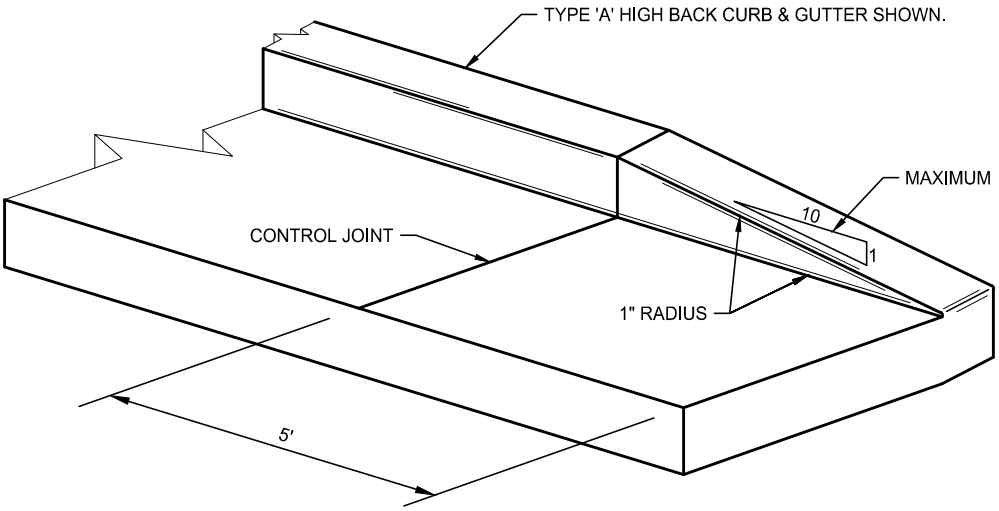

DRAWING NOT TO SCALE

PREPARED BY: JONES AND DEMILLE ENGINEERING, INC.

NORTH LOGAN CITY STANDARD DRAWING

NORTH LOGAN CITY
2525 N 600 E
NORTH LOGAN, UT 84341
(435) 752-1310
northlogancity.org

TAPERED CURB END

UPDATED: 1/16/2024

STANDARD DRAWING No.

ST-2

APPROVED:

DATE: -- BY: --

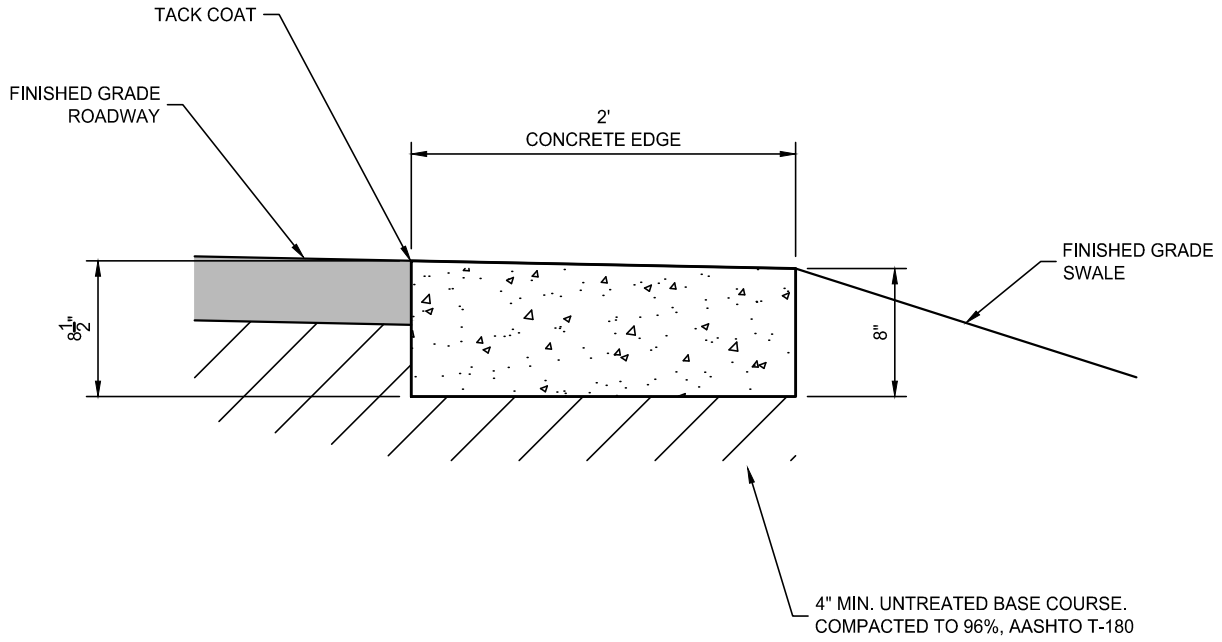

DRAWING NOT TO SCALE

PREPARED BY: JONES AND DEMILLE ENGINEERING, INC.

NORTH LOGAN CITY STANDARD DRAWING

NORTH LOGAN CITY
2525 N 600 E
NORTH LOGAN, UT 84341
(435) 752-1310
northlogancity.org

CONCRETE CURB EDGE

UPDATED: 1/16/2024

STANDARD DRAWING No.
ST-3
APPROVED:
DATE: -- BY: --

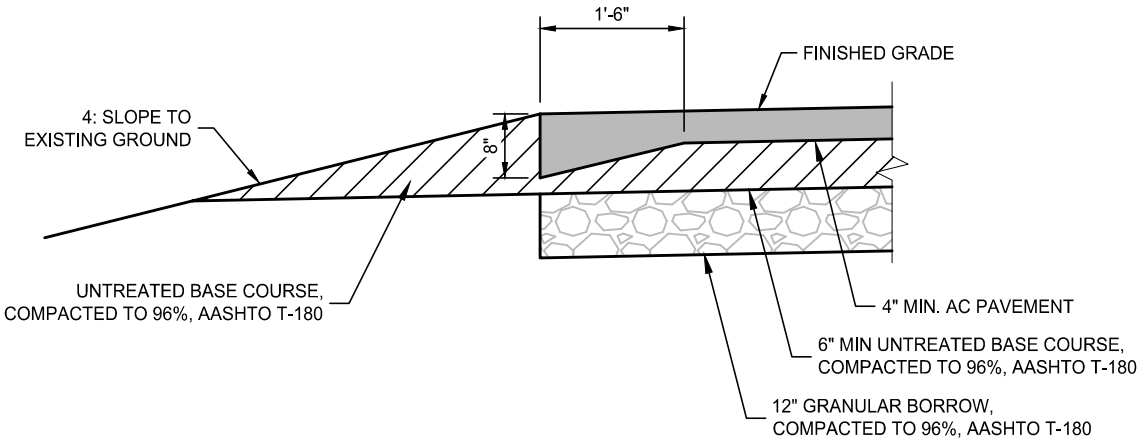

NOTES:

1. TO BE USED WHEN AND IF CONDITIONS WARRANT ELIMINATION OF STANDARD CURB AND GUTTER.
2. THIS TYPE OF CONSTRUCTION IS WARRANATED ONLYIN RURAL LOW DENSITY AREAS. COUNTRY AND RURAL ROADS MAY ALSO HAVE THIS TYPE OF CONSTRUCTION.
3. THIS TYPE OF CONSTRUCTION MUST BE APPROVED BY THE PLANNING COMMISION AND THE CITY ENGINEER.

DRAWING NOT TO SCALE

PREPARED BY: JONES AND DEMILLE ENGINEERING, INC.

NORTH LOGAN CITY STANDARD DRAWING

NORTH LOGAN CITY
2525 N 600 E
NORTH LOGAN, UT 84341
(435) 752-1310
northlogancity.org

MARICOPA EDGE

UPDATED: 1/16/2024

STANDARD DRAWING No.

ST-4

APPROVED:

DATE: -- BY: --

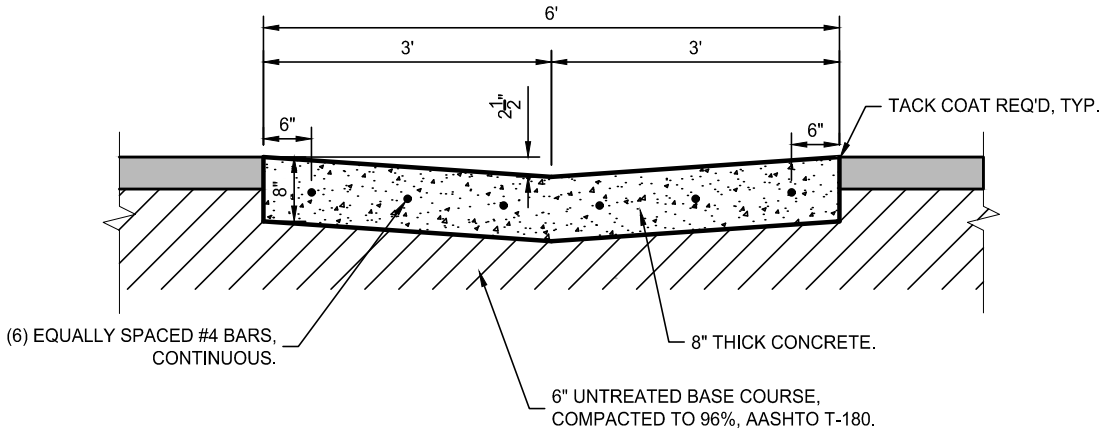

NOTES:
1. CONSTRUCT CROSS GUTTER TO DRAIN WITHOUT PONDING.
2. SEE CONCRETE JOINTS DETAILS.

DRAWING NOT TO SCALE

PREPARED BY: JONES AND DEMILLE ENGINEERING, INC.

NORTH LOGAN CITY STANDARD DRAWING

NORTH LOGAN CITY
2525 N 600 E
NORTH LOGAN, UT 84341
(435) 752-1310
northlogancity.org

6-FT WATERWAY

UPDATED: 1/16/2024

STANDARD DRAWING No.
ST-5
APPROVED:
DATE: -- BY: --

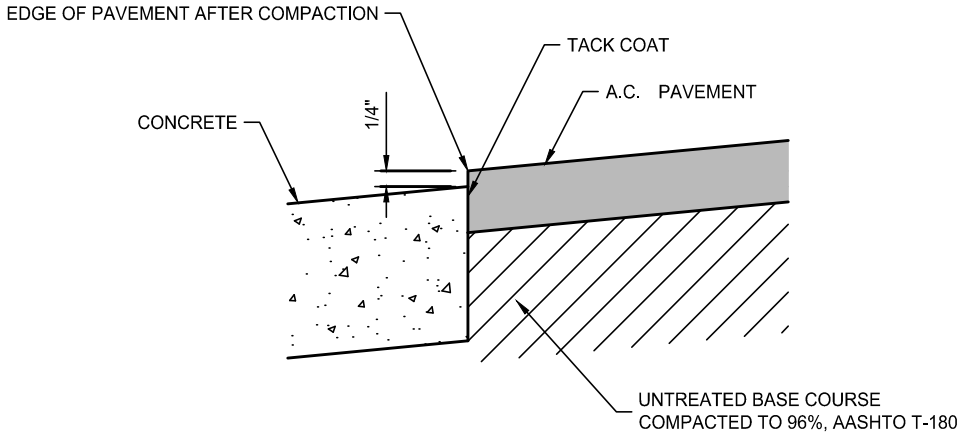

DRAWING NOT TO SCALE

PREPARED BY: JONES AND DEMILLE ENGINEERING, INC.

NORTH LOGAN CITY STANDARD DRAWING

NORTH LOGAN CITY
2525 N 600 E
NORTH LOGAN, UT 84341
(435) 752-1310
northlogancity.org

PAVEMENT EDGE

UPDATED: 1/16/2024

STANDARD DRAWING No.
ST-6
APPROVED:
DATE: -- BY: --

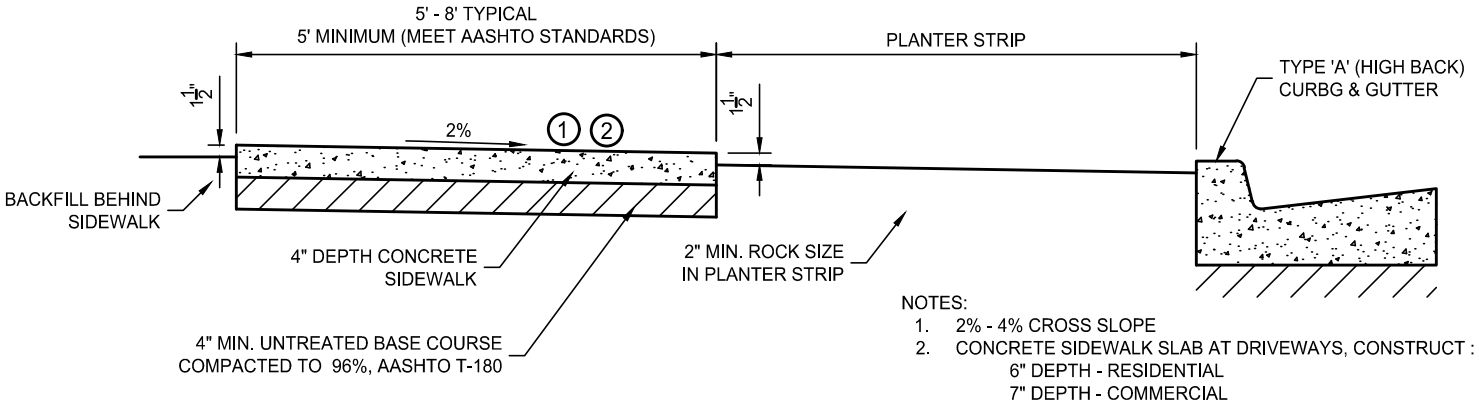

NOTES:
1. 2% - 4% CROSS SLOPE
2. CONCRETE SIDEWALK SLAB AT DRIVEWAYS, CONSTRUCT :
   6" DEPTH - RESIDENTIAL
   7" DEPTH - COMMERCIAL

CONVENTIONAL ROADWAY CURB, GUTTER AND SIDEWALK

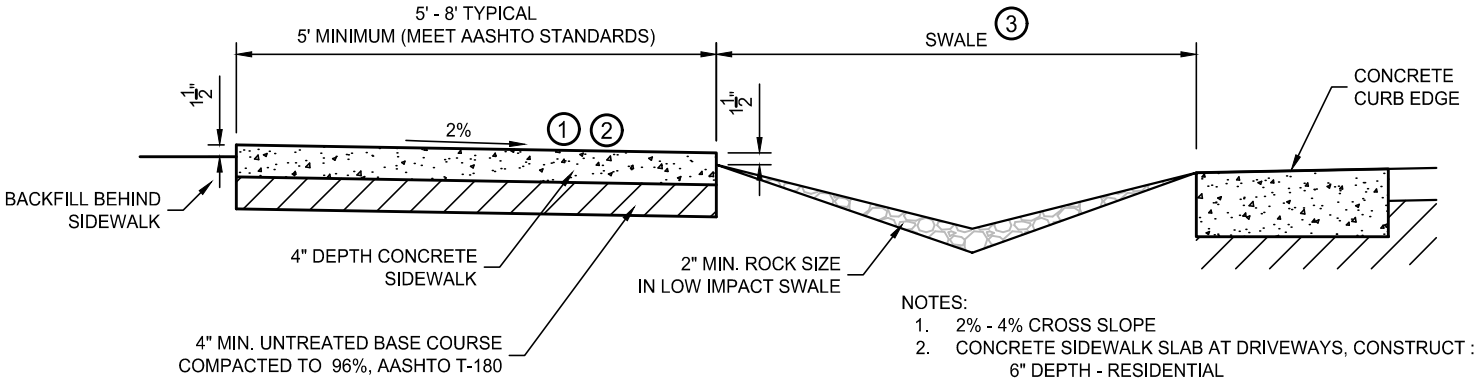

NOTES:
1. 2% - 4% CROSS SLOPE
2. CONCRETE SIDEWALK SLAB AT DRIVEWAYS, CONSTRUCT :
   6" DEPTH - RESIDENTIAL
   7" DEPTH - COMMERCIAL
3. SWALE SLOPES:
   FORESLOPE: 4:1
   BACKSLOPE : 3:1 MAX.
   8:1 MIN.

LOW IMPACT ROADWAY CURB AND SIDEWALK

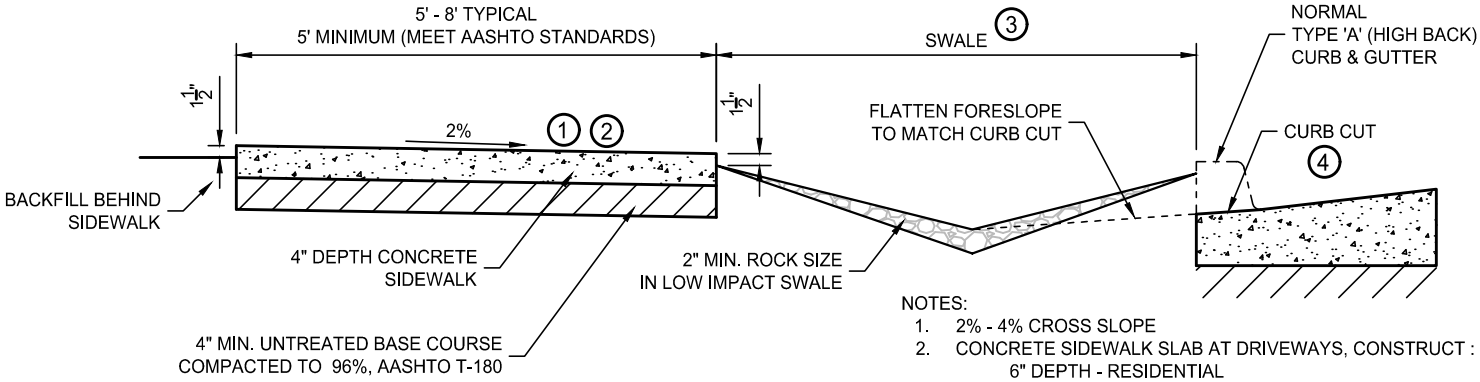

NOTES:
1. 2% - 4% CROSS SLOPE
2. CONCRETE SIDEWALK SLAB AT DRIVEWAYS, CONSTRUCT :
   6" DEPTH - RESIDENTIAL
   7" DEPTH - COMMERCIAL
3. SWALE SLOPES:
   FORESLOPE: 4:1
   BACKSLOPE : 3:1 MAX.
   8:1 MIN.
4. CURB CUT SPACED AT ADEQUATE INTERVALS TO CATCH SURFACE WATER AND RE-ROUTE TO SWALE AREA.

LOW IMPACT ROADWAY CURB, GUTTER AND SIDEWALK

OPTIONAL (HIGH BACK CURB)

DRAWING NOT TO SCALE

PREPARED BY: JONES AND DEMILLE ENGINEERING, INC.

NORTH LOGAN CITY STANDARD DRAWING

NORTH LOGAN CITY 2525 N 600 E NORTH LOGAN, UT 84341 (435) 752-1310 northlogancity.org	CONCRETE SIDEWALK UPDATED: 1/16/2024	STANDARD DRAWING No. ST-7 APPROVED: DATE: -- BY: --

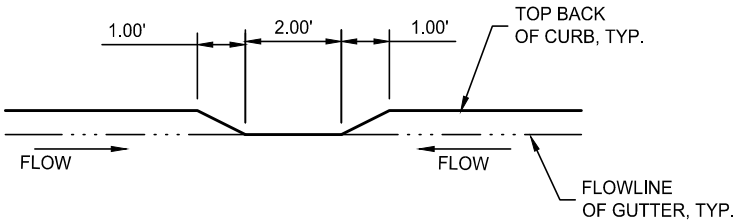

CURB PROFILE

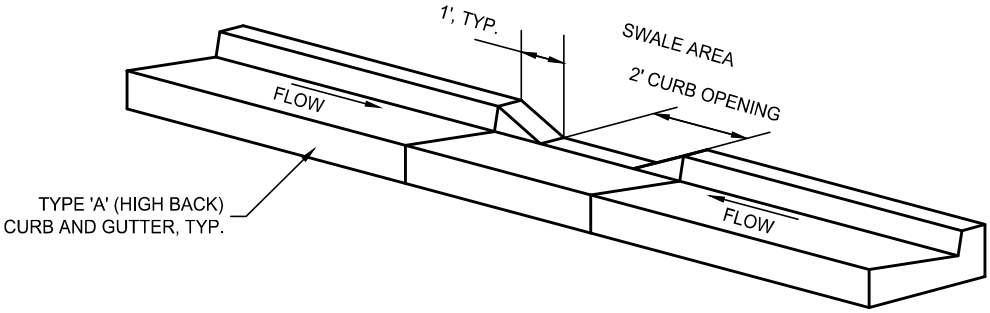

DRAWING NOT TO SCALE

PREPARED BY: JONES AND DEMILLE ENGINEERING, INC.

NORTH LOGAN CITY STANDARD DRAWING

NORTH LOGAN CITY
2525 N 600 E
NORTH LOGAN, UT 84341
(435) 752-1310
northlogancity.org

CURB CUT

UPDATED: 1/16/2024

STANDARD DRAWING No.
ST-8
APPROVED:
DATE: -- BY: --

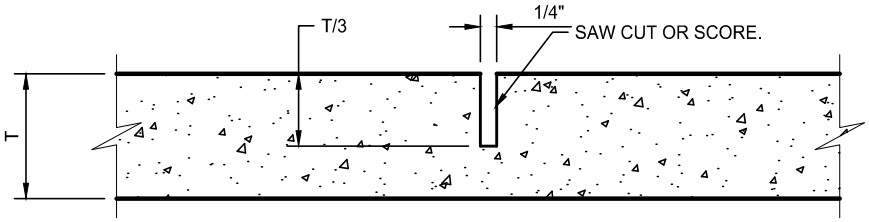

CONTROL JOINT

NOTES:
1. USE FOR CURB & GUTTER, CROSS GUTTER, AND SIDEWALK.
2. FOR FLATWORK, PLACE AT SPACING EQUAL TO SLAB WIDTH, BUT NOT GREATER THAN 12'
3. FOR CURB & GUTTER AND CROSS GUTTER PLACE AT 10' INTERVALS.

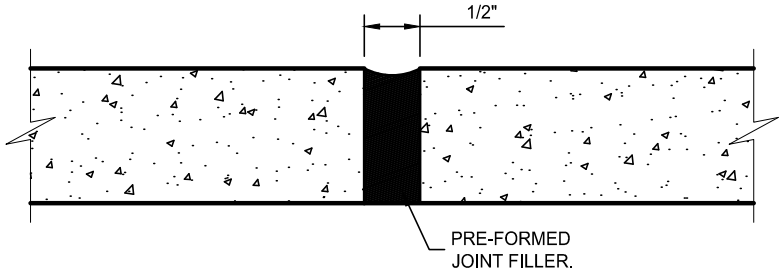

EXPANSION JOINT

NOTES:
1. USE FOR CURB & GUTTER, CROSS GUTTER, AND SIDEWALK.
2. FOR FLATWORK, PLACE AT 50' INTERVALS.
3. FOR CURB & GUTTER, PLACE AT 50' INTERVALS, EXCEPT WHEN USING SLIP FORM MACHINE, PLACE AT BEGINNING AND END OF EACH CONTINUOUS RUN.

DRAWING NOT TO SCALE

PREPARED BY: JONES AND DEMILLE ENGINEERING, INC.

NORTH LOGAN CITY STANDARD DRAWING

NORTH LOGAN CITY 2525 N 600 E NORTH LOGAN, UT 84341 (435) 752-1310 northlogancity.org	CONCRETE CONTROL JOINTS UPDATED: 1/16/2024	STANDARD DRAWING No. ST-9 APPROVED: DATE: -- BY: --

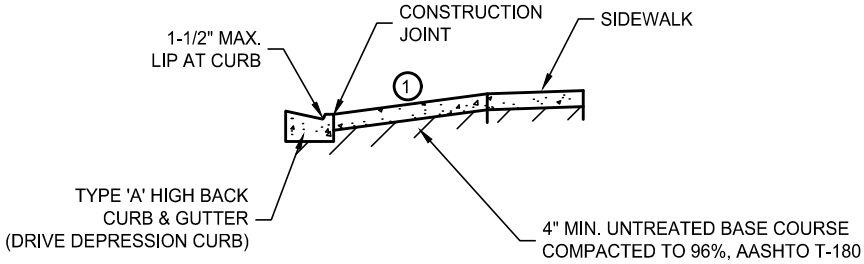

SECTION A-A

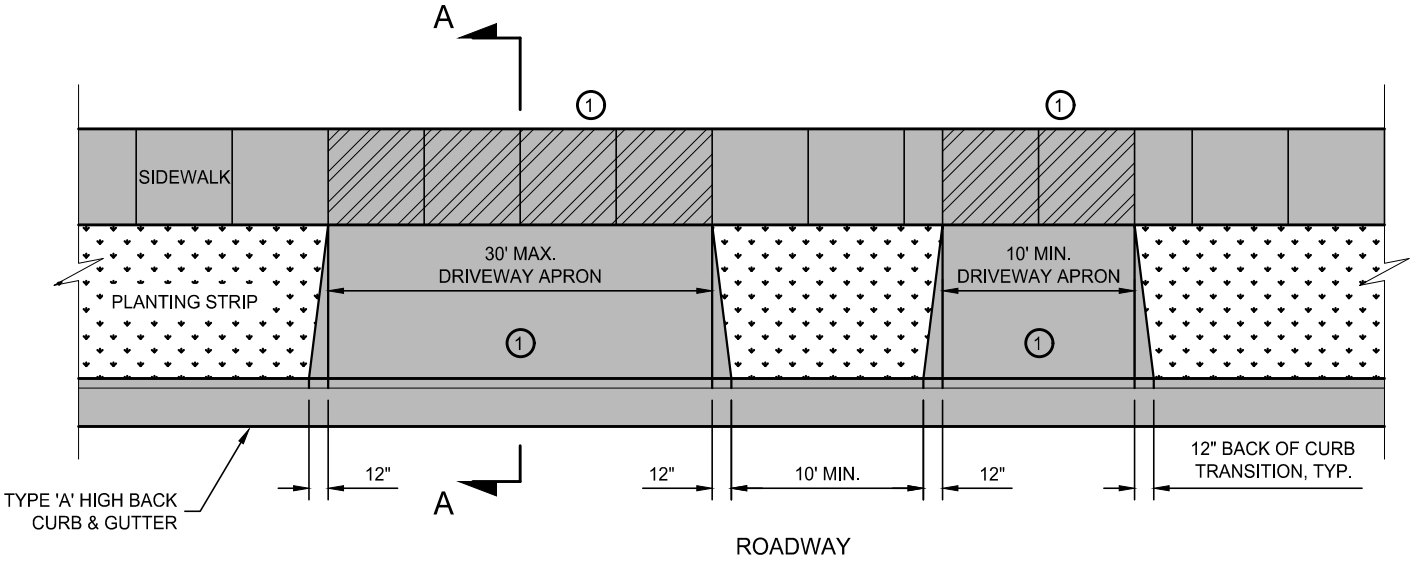

NOTES:

1. CONCRETE SIDEWALK SLAB AT DRIVEWAYS, CONSTRUCT :
   6" DEPTH - RESIDENTIAL
   7" DEPTH - COMMERCIAL

DRAWING NOT TO SCALE

PREPARED BY: JONES AND DEMILLE ENGINEERING, INC.

NORTH LOGAN CITY STANDARD DRAWING

NORTH LOGAN CITY
2525 N 600 E
NORTH LOGAN, UT 84341
(435) 752-1310
northlogancity.org

CONVENTIONAL DRIVEWAY

UPDATED: 1/16/2024

STANDARD DRAWING No.
ST-10
APPROVED:
DATE: -- BY: --

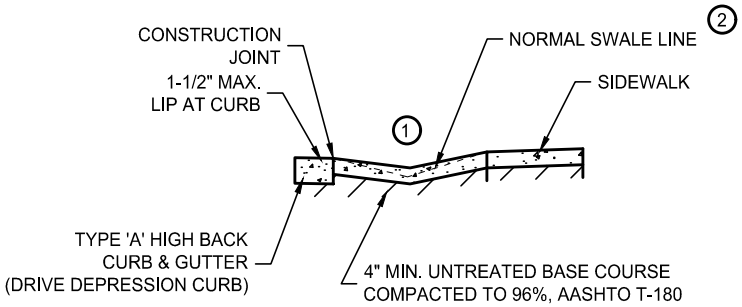

SECTION B-B

CONCRETE WATERWAY THROUGH DRIVEWAY

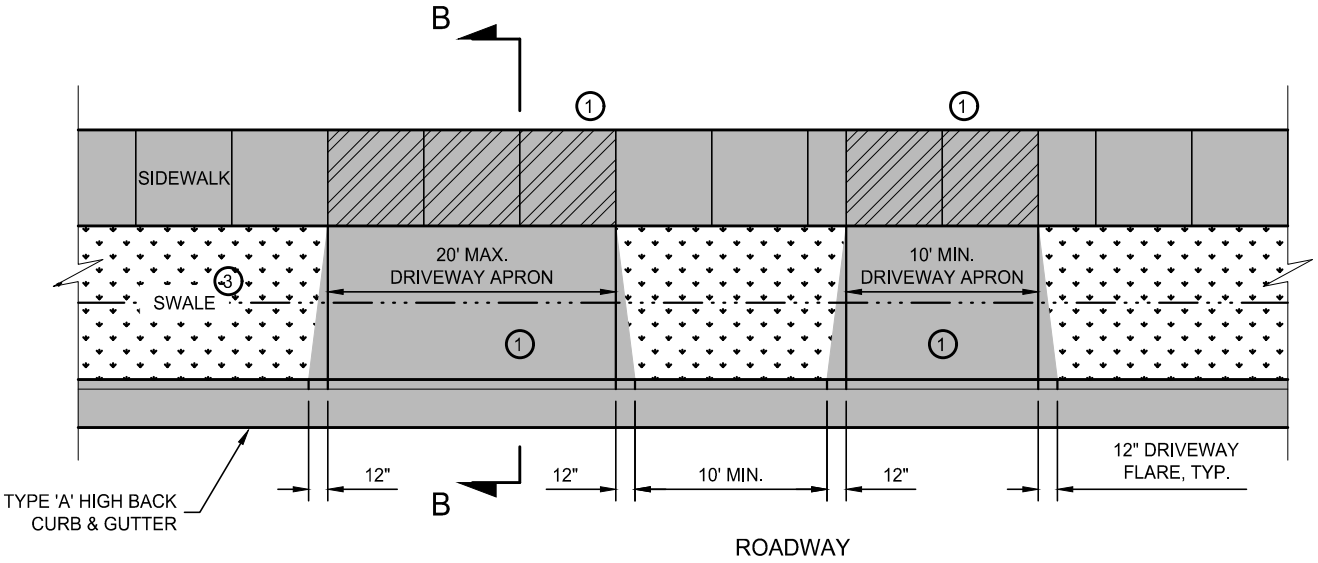

NOTES:

1. CONCRETE SIDEWALK SLAB AT DRIVEWAYS, CONSTRUCT :
   6" DEPTH - RESIDENTIAL
   7" DEPTH - COMMERCIAL
2. ADJUST SWALE FLOW LINE TO DRIVEWAY FLOW LINE TO MAINTAIN DRAINAGE.
3. 2" MIN. ROCK SIZE IN LOW IMPACT SWALE

DRAWING NOT TO SCALE

PREPARED BY: JONES AND DEMILLE ENGINEERING, INC.

NORTH LOGAN CITY STANDARD DRAWING

NORTH LOGAN CITY
2525 N 600 E
NORTH LOGAN, UT 84341
(435) 752-1310
northlogancity.org

LOW IMPACT DRIVEWAY

UPDATED: 1/16/2024

STANDARD DRAWING No.
ST-11
APPROVED:
DATE: -- BY: --

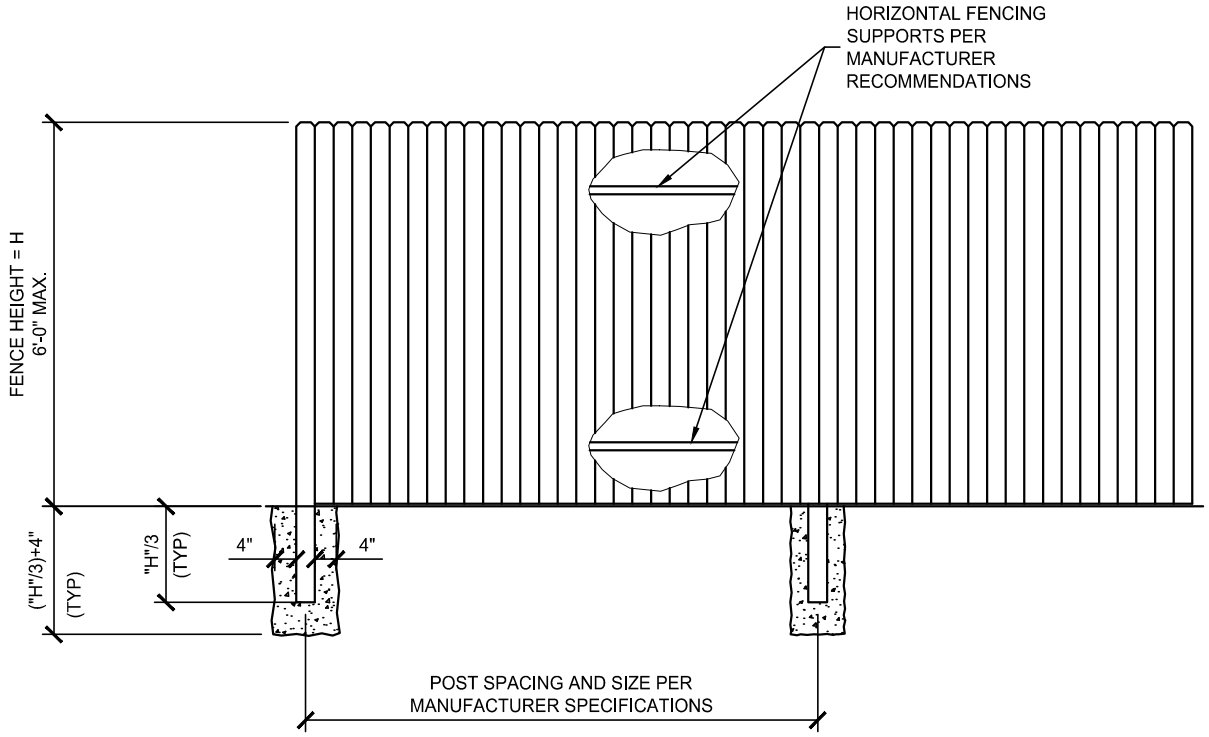

NOTES:

1. NO FENCE SHALL BE ERECTED IN ANY FRONT, REAR OR SIDE YARD IN EXCESS OF 6 FEET.

DRAWING NOT TO SCALE

PREPARED BY: JONES AND DEMILLE ENGINEERING, INC.

NORTH LOGAN CITY STANDARD DRAWING

NORTH LOGAN CITY 2525 N 600 E NORTH LOGAN, UT 84341 (435) 752-1310 northlogancity.org	6-FT FENCE UPDATED: 1/16/2024	STANDARD DRAWING No. ST-12 APPROVED: DATE: -- BY: --

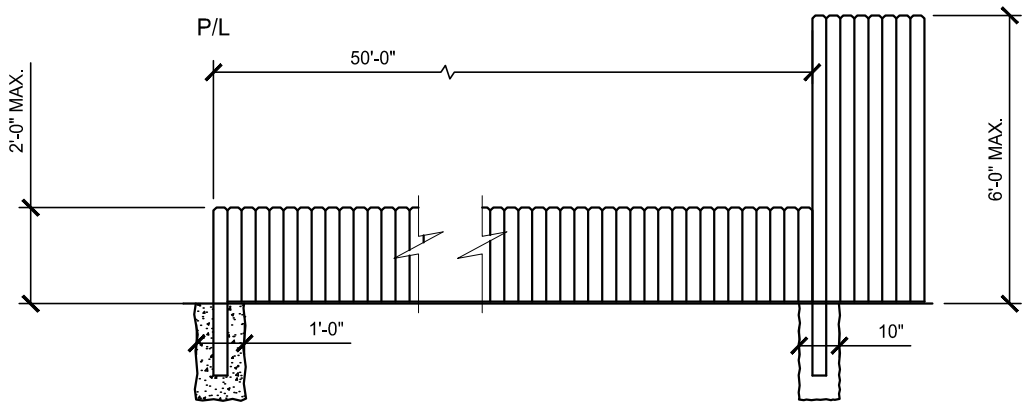

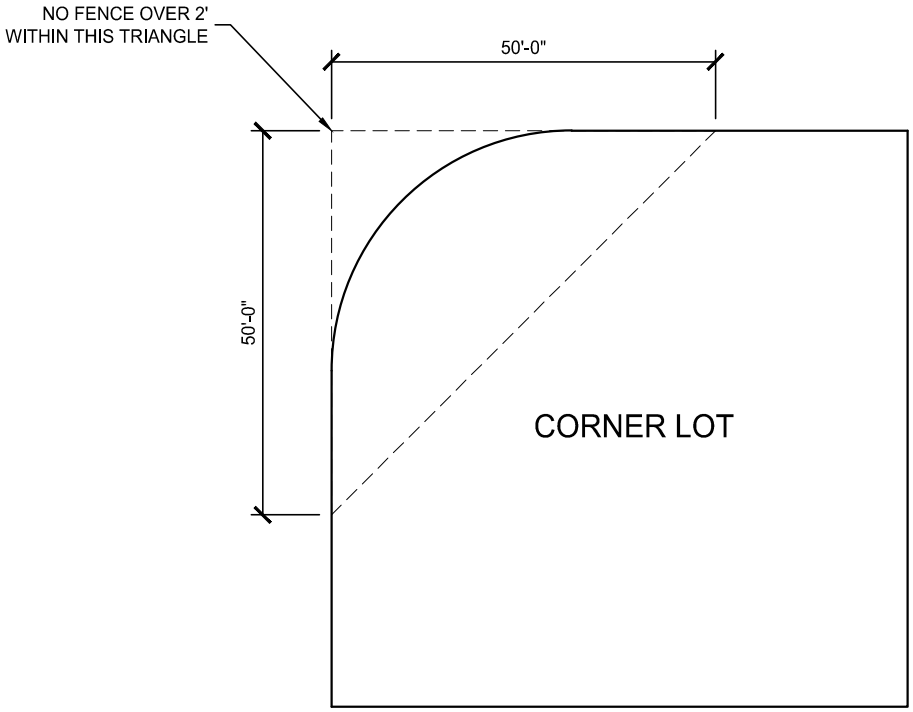

NOTES:

1. NO FENCE SHALL BE ERECTED IN ANY FRONT, REAR OR SIDE YARD IN EXCESS OF 6 FEET.
2. IN ALL ZONES WHICH REQUIRE A FRONT YARD, NO OBSTRUCTION TO VIEW IN THE EXCESS OF 2' IN HEIGHT SHALL BE PLACED ON ANY CORNER LOT WITHIN THE TRIANGLE AREA FORMED BY THE STREET PROPERTY LINES AND A LINE CONNECTING THEM AT 50' FROM THE INTERSECTION OF THE STREET LINES EXCEPT A REASONABLE NUMBER OF TREES PRUNED HIGH ENOUGH TO PERMIT AN UNOBSTRUCTED VISION TO AUTOMOBILE DRIVERS AND PUMPS AT GAS STATIONS.

DRAWING NOT TO SCALE

PREPARED BY: JONES AND DEMILLE ENGINEERING, INC.

NORTH LOGAN CITY STANDARD DRAWING

NORTH LOGAN CITY
2525 N 600 E
NORTH LOGAN, UT 84341
(435) 752-1310
northlogancity.org

FENCE AT INTERSECTION

UPDATED: 1/16/2024

STANDARD DRAWING No.

ST-13

APPROVED:

DATE: -- BY: --

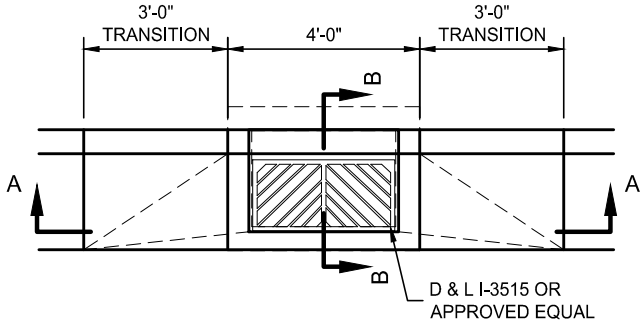

PLAN

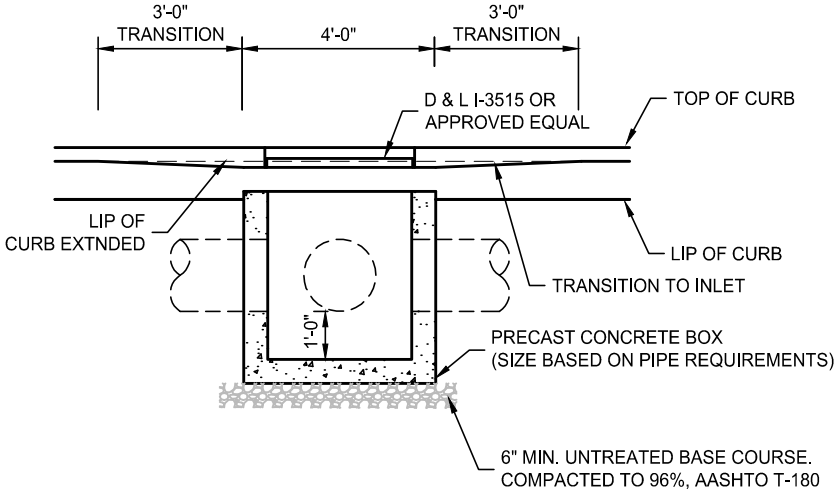

SECTION A-A

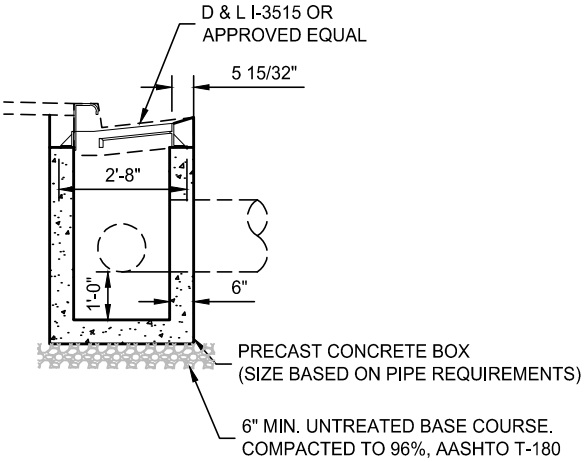

SECTION B-B

DRAWING NOT TO SCALE

PREPARED BY: JONES AND DEMILLE ENGINEERING, INC.

NORTH LOGAN CITY STANDARD DRAWING

NORTH LOGAN CITY
2525 N 600 E
NORTH LOGAN, UT 84341
(435) 752-1310
northlogancity.org

OPEN FACE CURB INLET

UPDATED: 1/16/2024

STANDARD DRAWING No.
ST-14
APPROVED:
DATE: -- BY: --

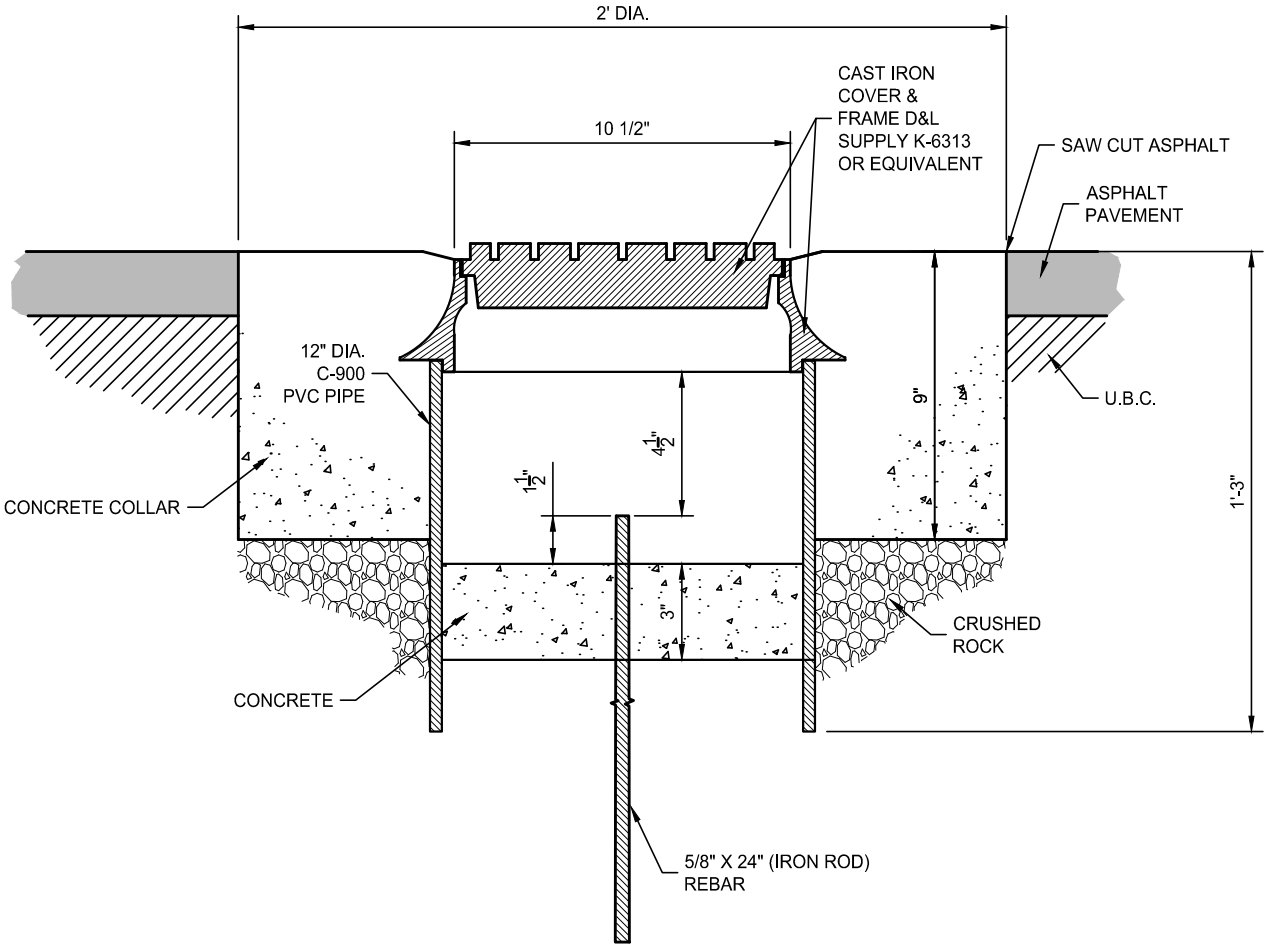

DRAWING NOT TO SCALE

PREPARED BY: JONES AND DEMILLE ENGINEERING, INC.

NORTH LOGAN CITY STANDARD DRAWING

NORTH LOGAN CITY
2525 N 600 E
NORTH LOGAN, UT 84341
(435) 752-1310
northlogancity.org

STREET MONUMENT

UPDATED: 1/16/2024

STANDARD DRAWING No.
ST-15
APPROVED:
DATE: -- BY: --

PIPE DATA TABLE			
MAIN LINE TYPE	MIN. PIPE DIAMETER	MIN. BURY DEPTH	MARKER COLOR
WATER	8"	60"	BLUE
SEWER	8"	48"	GREEN
STORM DRAIN	15"	12"	-
GAS	-	18"	YELLOW
POWER (IN CONDUIT)	-	18"	RED
POWER (TRECH CABLE)	-	36"	RED
COMMUNICATION	-	18"	ORANGE

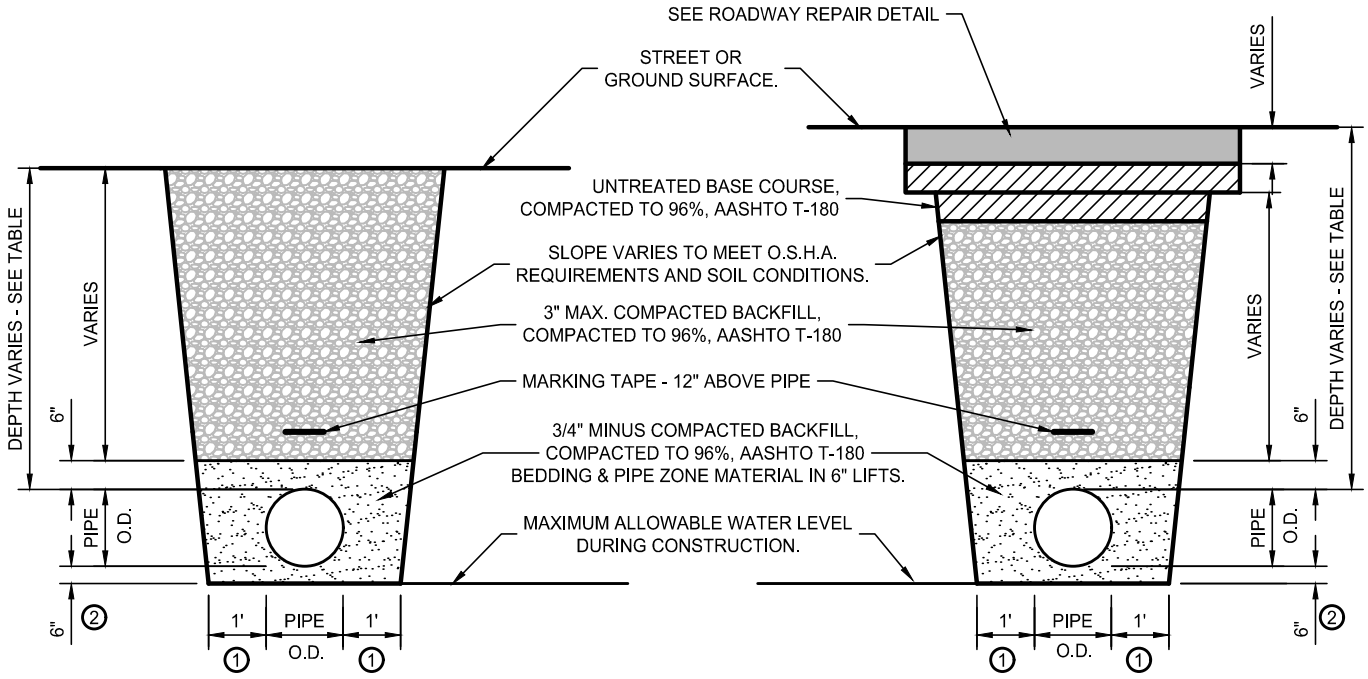

NON-TRAVELED AREAS

TRAVELED AREAS

NOTES:

1. MINIMUM CLEAR DISTANCE FROM OUTSIDE OF PIPE TO TRENCH IS 1', AND NOT TO EXCEED 2'-6".
2. PIPE MUST BE PROPERLY BEDDED. IF ROCK OR OTHER UNSUITABLE MATERIALS ARE ENCOUNTERED, EXCAVATE 6" BELOW AND REPLACE WITH SELECTED 3/4" MINUS COMPACTED BACKFILL.
3. 3/4" MINUS CRUSHED ROCK OR SEWER GRAVEL ARE ALLOWED IN AREAS WHERE THE WATER TABLE IS BETWEEN 0.5' AND 1.5' BELOW EXISTING GRADE.
4. IF BEDDING DEPTH EXCEEDS ACTUAL TRENCH DEPTH, USE FLOWABLE FILL FOR FULL DEPTH.
5. IF CONNECTING NEW SERVICE OR NEW MAIN LINE TO EXISTING MAIN LINE BACKFILL WITH CEMENT TREATED FLOWABLE FILL.

DRAWING NOT TO SCALE

PREPARED BY: JONES AND DEMILLE ENGINEERING, INC.

NORTH LOGAN CITY STANDARD DRAWING

NORTH LOGAN CITY
2525 N 600 E
NORTH LOGAN, UT 84341
(435) 752-1310
northlogancity.org

UTILITY TRENCH

UPDATED: 1/16/2024

STANDARD DRAWING No.
TR-1
APPROVED:
DATE: -- BY: --

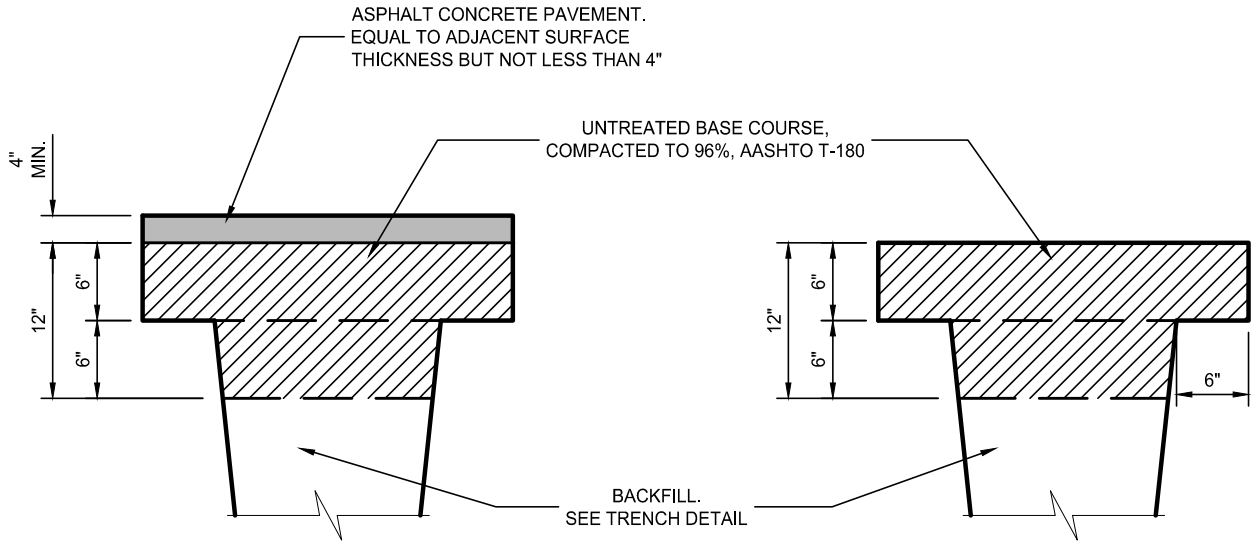

ASPHALT SURFACING

GRAVEL SURFACING

DRAWING NOT TO SCALE

PREPARED BY: JONES AND DEMILLE ENGINEERING, INC.

NORTH LOGAN CITY STANDARD DRAWING

NORTH LOGAN CITY
2525 N 600 E
NORTH LOGAN, UT 84341
(435) 752-1310
northlogancity.org

ROADWAY REPAIR

UPDATED: 1/16/2024

STANDARD DRAWING No.
TR-2
APPROVED:
DATE: -- BY: --

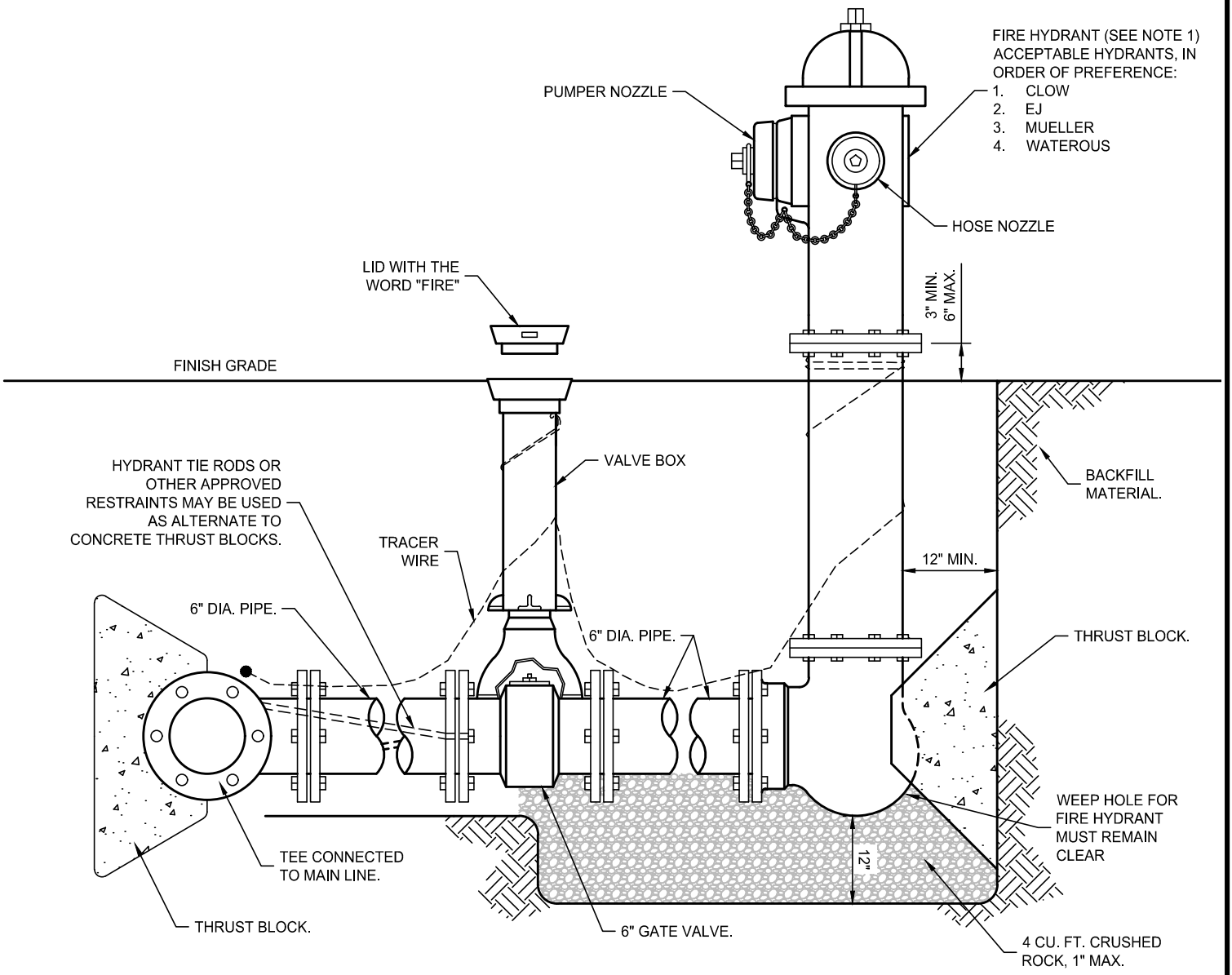

FIRE HYDRANT NOTES:

1. FIRE HYDRANT MUST BE IN COMPLIANCE WITH THE APPLICABLE FIRE DISTRICT STANDARD FIRE HYDRANT.
2. OUTLET REQUIREMENTS:
   (1) PUMPER = 5-1/4"
   (2) HOSE = 2-1/2"
3. ALL FIRE HYDRANTS WILL STAND PLUMB WITH THE PUMPER NOZZLE FACING THE STREET.
4. HYDRANT STANDARD LOCATION IS BETWEEN THE SIDEWALK AND CURB & GUTTER.
5. INSTALL TRACER WIRE WITH PLASTIC PIPE. WRAP TRACER WIRE AROUND FIRE HYDRANT ABOVE GROUND.
6. FIRE HYDRANTS AND VALVES NEED TO BE PURCHASED WITH STAINLESS STEEL BOLT PACKS AND VALVE BONNETS
7. EPOXY COATED BLUE OR STAINLESS STEEL BOLT PACKS FOR ALL FLANGE AND MJ CONNECTIONS.

VALVE BOX NOTES:

a. PLANTER STRIP / SWALE AREA: FLUSH WITH FINISHED GRADE
b. ASPHALT AREA: 24" DIAMETER CONCRETE COLLAR AROUND RING AND COVER. RING AND COVER TO BE 1/4" BELOW GRADE.

DRAWING NOT TO SCALE

PREPARED BY: JONES AND DEMILLE ENGINEERING, INC.

NORTH LOGAN CITY STANDARD DRAWING

NORTH LOGAN CITY
2525 N 600 E
NORTH LOGAN, UT 84341
(435) 752-1310
northlogancity.org

FIRE HYDRANT

UPDATED: 1/16/2024

STANDARD DRAWING No.
CW-1
APPROVED:
DATE: -- BY: --

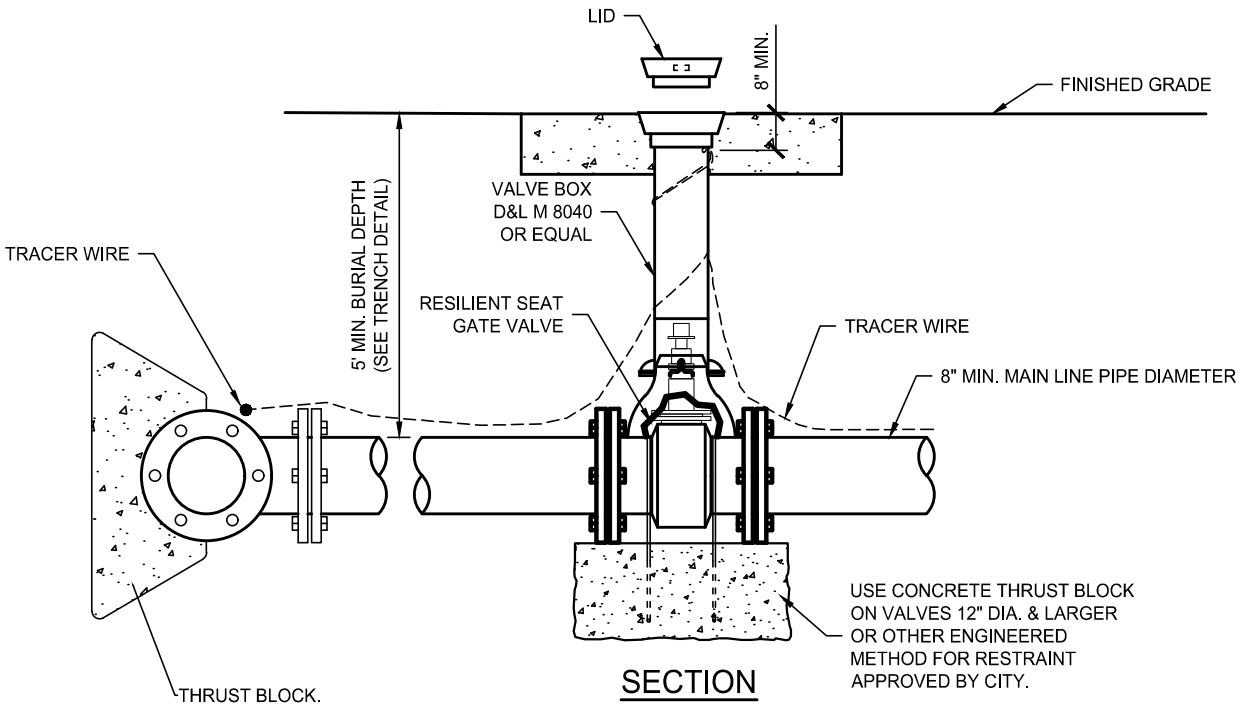

SECTION

NOTE:

1. WHEN VALVE IS WITHIN PAVED STREET OR AS NOTED, CONSTRUCT CONCRETE COLLAR.
2. INSTALL TRACER WIRE WRAP VALVE BOX TWICE AND PUSH THROUGH A CUT HOLE INTO VALVE BOX. 8" BELOW FINISHED GRADE.
3. THRUST BLOCK REQUIRED WHEN NORMAL OPERATING CONDITIONS HAVE AN EMPTY PIPE ON THE SIDE OF THE VALVE.
4. GREASE AND WRAP BOLTED CONNECTIONS, FITTINGS, AND VALVES IN AREAS OF HIGH SOIL CORROSIVITY.
5. VALVES NEED TO BE PURCHASED WITH STAINLESS STEEL BOLT PACKS AND VALVE BONNETS.
6. EPOXY COATED BLUE OR STAINLESS STEEL BOLT PACKS FOR ALL FLANGE AND MJ CONNECTIONS.

DRAWING NOT TO SCALE

PREPARED BY: JONES AND DEMILLE ENGINEERING, INC.

NORTH LOGAN CITY STANDARD DRAWING

NORTH LOGAN CITY
2525 N 600 E
NORTH LOGAN, UT 84341
(435) 752-1310
northlogancity.org

WATER VALVE

UPDATED: 1/16/2024

STANDARD DRAWING No.
CW-2
APPROVED:
DATE: -- BY: --

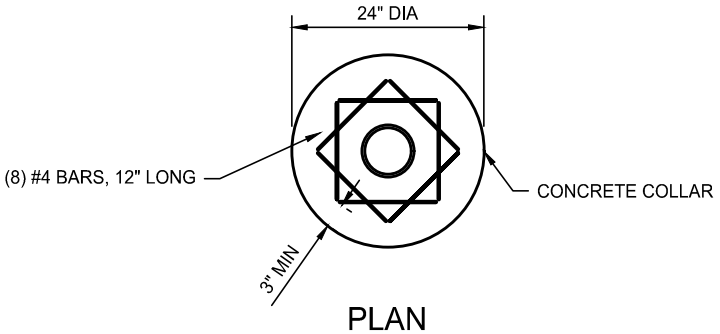

PLAN

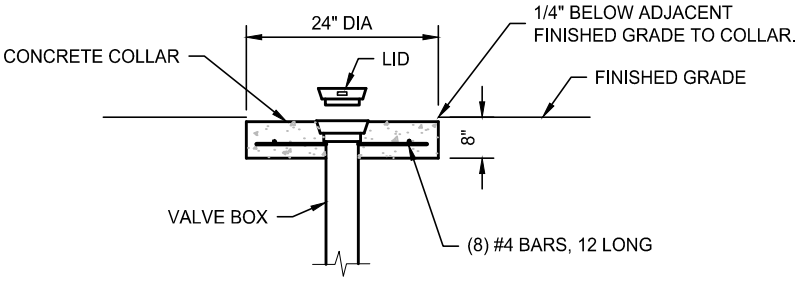

SECTION

NOTES:
1. ADJUST VALVE BOX AND LID TO FINISH GRADE. (1/4" BELOW FINISH GRADE)
2. CONCRETE COLLAR REQ'D FOR VALVES WITHIN PAVED STREETS.

DRAWING NOT TO SCALE

PREPARED BY: JONES AND DEMILLE ENGINEERING, INC.

NORTH LOGAN CITY STANDARD DRAWING

NORTH LOGAN CITY
2525 N 600 E
NORTH LOGAN, UT 84341
(435) 752-1310
northlogancity.org

WATER VALVE CONCRETE COLLAR

UPDATED: 1/16/2024

STANDARD DRAWING No.
CW-3
APPROVED:
DATE: -- BY: --

MATER & BARREL TABLE				
METER SIZE	BARRREL DIAMETER	SETTER LENGTH = "L"	METER LIDS & RINGS	METERS
3/4"	21" ADS	~ 9"	D&L #L-2244	MASTER METER ALLEGRO
1"	21" ADS	~ 11"	D&L #L-2244	MASTER METER ALLEGRO
1-1/2"	36" ADS	~ 13"	D&L #L-2326	MASTER METER OCTIVE
2"	36" ADS	~ 17"	D&L #L-2326	MASTER METER OCTIVE
> 2"	APWA CONCRETE METER BOX			MASTER METER OCTIVE

NOTE:
CITY WILL ALLOW CONCRETE METER BOX OPTION FOR 1 -1/2" AND GREATER METER OR IN TRAFFIC AREAS.

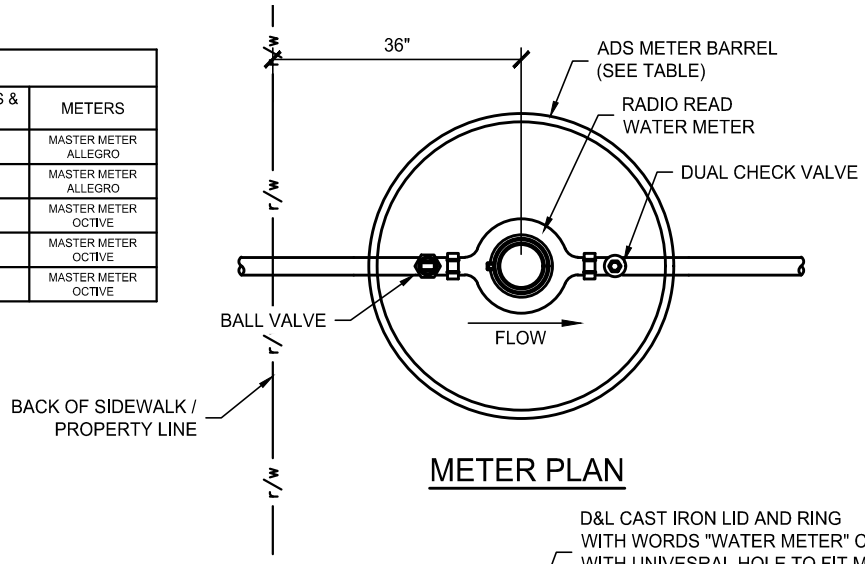

METER PLAN

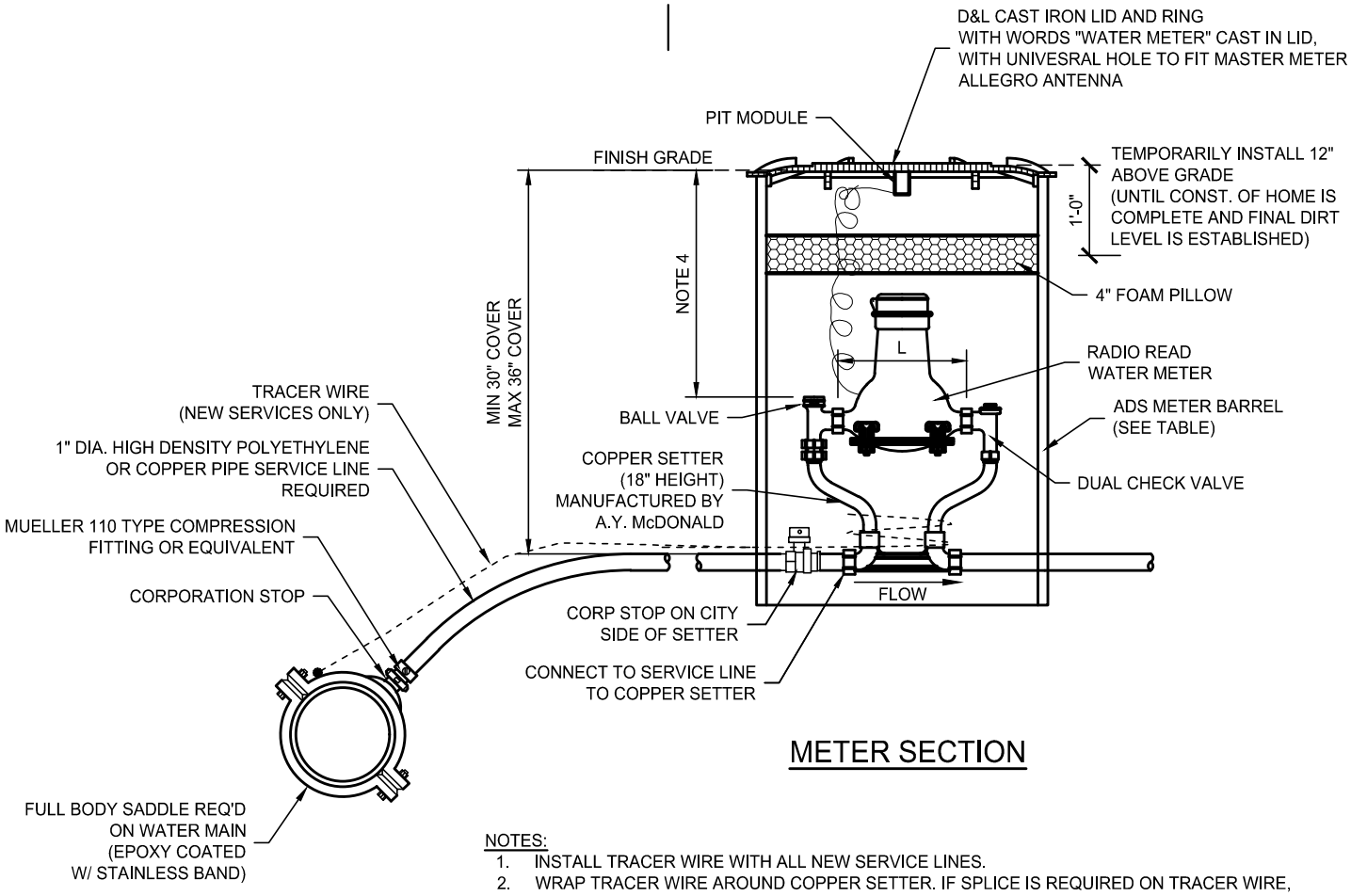

METER SECTION

NOTES:
1. INSTALL TRACER WIRE WITH ALL NEW SERVICE LINES.
2. WRAP TRACER WIRE AROUND COPPER SETTER. IF SPLICE IS REQUIRED ON TRACER WIRE, MAKE WATERTIGHT CONNECTION.
3. USE APWA TRAFFIC RATED CONCRETE METER BOX AND TRAFFIC RATED LID WHEN METER IS LOCATED IN TRAFFIC AREA, WHICH INCLUDE ROADWAYS, PARKING AREAS AND DRIVEWAYS.
4. TOP OF SETTER TO BE 18" -20" BELOW FINAL GRADE.
5. FOAM PILLOW MAY BE NEEDED IN AREAS WHERE WATER MARKERS ARE ABOVE FROST DEPTH.
6. NO GALVANIZED FITTINGS ALLOWED.
7. WATER METERS MUST BE THE SAME SIZE OF LINE CONNECTED TO THE CITY MAIN BEGINNING AT 1 INCH METER AND LARGER.

DRAWING NOT TO SCALE

PREPARED BY: JONES AND DEMILLE ENGINEERING, INC.

NORTH LOGAN CITY STANDARD DRAWING

NORTH LOGAN CITY
2525 N 600 E
NORTH LOGAN, UT 84341
(435) 752-1310
northlogancity.org

WATER METER

UPDATED: 1/16/2024

STANDARD DRAWING No.
CW-4
APPROVED:
DATE: -- BY: --

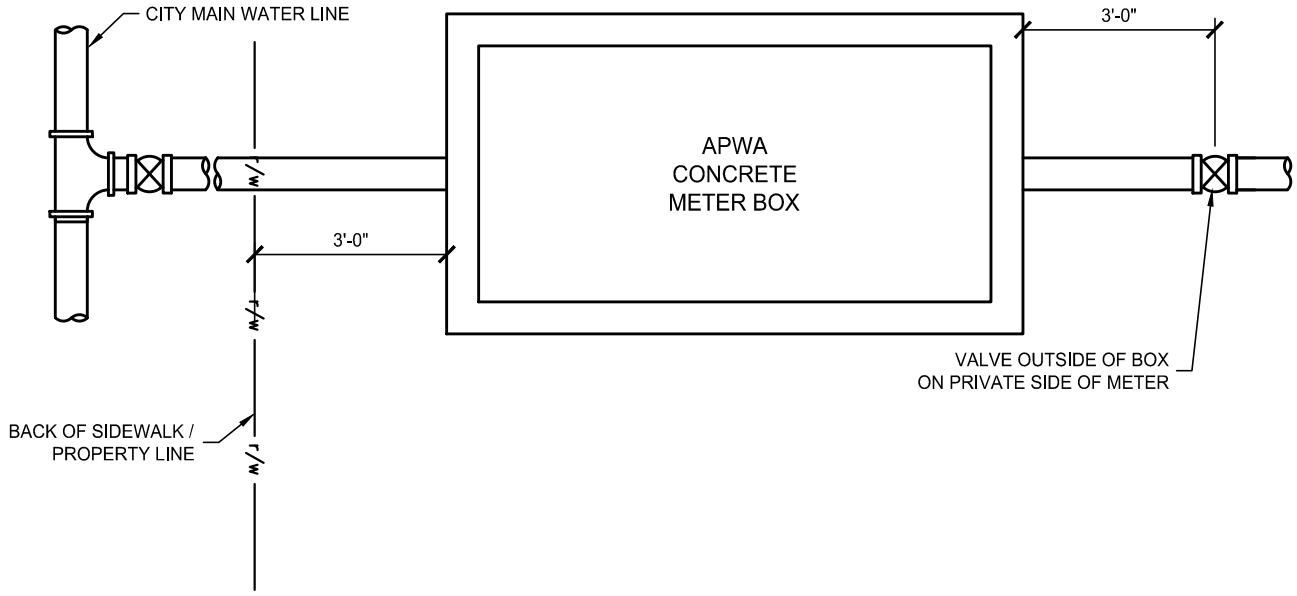

DRAWING NOT TO SCALE

PREPARED BY: JONES AND DEMILLE ENGINEERING, INC.

NORTH LOGAN CITY STANDARD DRAWING

NORTH LOGAN CITY
2525 N 600 E
NORTH LOGAN, UT 84341
(435) 752-1310
northlogancity.org

2-IN AND LARGER WATER METER

UPDATED: 1/16/2024

STANDARD DRAWING No.
CW-5
APPROVED:
DATE: -- BY: --

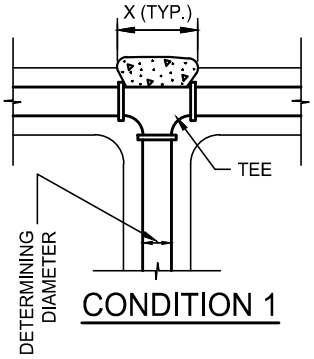

CONDITION 1

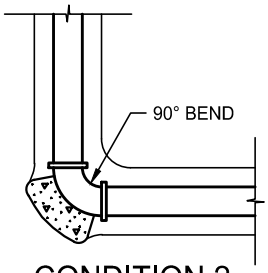

CONDITION 2

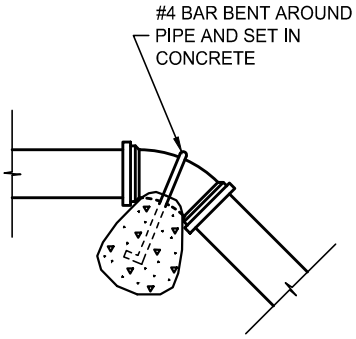

VERTICAL BEND DETAIL

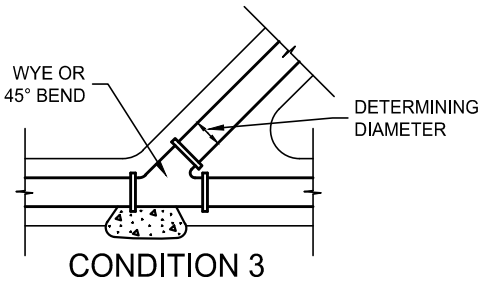

CONDITION 3

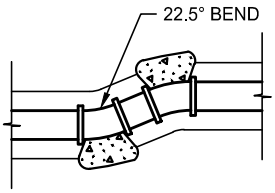

CONDITION 4

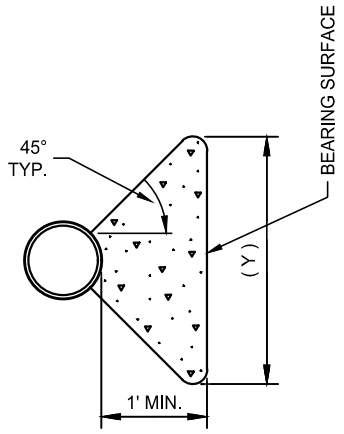

TYPICAL THRUST BLOCK SECTION

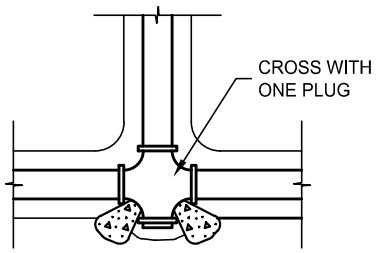

CONDITION 5

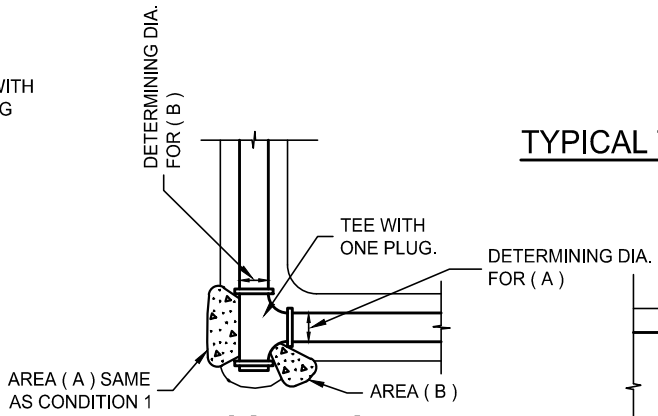

CONDITION 6

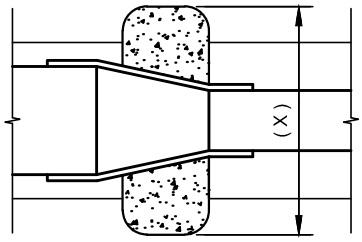

REDUCER THRUST BLOCK

8"x 4" REDUCER - BEARING AREA = 7.5 SQ. FT.
8"x 6" REDUCER - BEARING AREA = 4.4 SQ. FT.
10"x 6" REDUCER - BEARING AREA = 10.0 SQ. FT. 10"x 8" REDUCER - BEARING AREA = 5.6 SQ. FT.
12"x 6" REDUCER - BEARING AREA = 17.0 SQ. FT.
12"x 10" REDUCER - BEARING AREA = 6.9 SQ. FT.

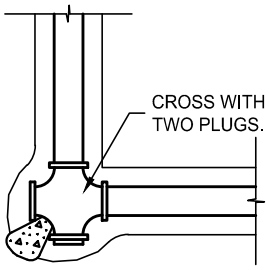

CONDITION 7

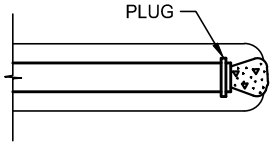

CONDITION 8

NOTE: SEE S-422 FOR THRUST BLOCK BEARING AREAS.

DRAWING NOT TO SCALE

PREPARED BY: JONES AND DEMILLE ENGINEERING, INC.

NORTH LOGAN CITY STANDARD DRAWING

NORTH LOGAN CITY
2525 N 600 E
NORTH LOGAN, UT 84341
(435) 752-1310
northlogancity.org

THRUST BLOCKS

UPDATED: 1/16/2024

STANDARD DRAWING No.
CW-6
APPROVED:
DATE: -- BY: --

CONCRETE THRUST BLOCK BEARING AREA (X) x (Y) (FOR REDUCERS)									
UPSTREAM PIPE SIZE (INCH)	DOWNSTREAM PIPE SIZE (INCH) & WORKING PRESSURE								
	2	4	6	8	10	12	14	16	18
	235 psi	235 psi	235 psi	235 psi	235 psi	235 psi	235 psi	235 psi	235 psi
2		2.2	5.9	11.1	17.7	25.8	35.4	46.5	59.1
4	2.2		3.7	8.9	15.5	23.6	33.2	44.3	56.8
6	5.9	3.7		5.2	11.8	19.9	29.5	40.6	53.2
8	11.1	8.9	5.2		6.6	14.8	24.4	35.4	48.0
10	17.7	15.5	11.8	6.6		8.1	17.7	28.8	41.3
12	25.8	23.6	19.9	14.8	8.1		9.6	20.7	33.2
14	35.4	33.2	29.5	24.4	17.7	9.6		11.1	23.6
16	46.5	44.3	40.6	35.4	28.8	20.7	11.1		12.6
18	59.1	56.8	53.2	48.0	41.3	33.2	23.6	12.6	

BEARING AREAS ARE IN SQUARE FEET.

CONCRETE THRUST BLOCK BEARING AREA (X) x (Y)								
PIPE SIZE (INCH)	CONDITION NUMBER & PIPE WORKING PRESSURE							
	1	2	3	4	5*	6 (B)	7	8
	235 psi	235 psi	235 psi	235 psi	235 psi	235 psi	235 psi	235 psi
2	0.7	1.0	0.6	0.3	0.5	0.5	1.0	0.7
4	3.0	4.2	2.3	1.2	2.1	2.1	4.2	3.0
6	6.6	9.4	5.1	2.6	4.7	4.7	9.4	6.6
8	11.8	16.7	9.0	4.6	8.4	8.4	16.7	11.8
10	18.5	26.1	14.1	7.2	13.1	13.1	26.1	18.5
12	26.6	37.6	20.3	10.4	18.8	18.8	37.6	26.6
14	36.2	51.2	27.7	14.1	25.6	25.6	51.2	36.2
16	47.2	66.8	36.2	18.4	33.4	33.4	66.8	47.2
18	59.8	84.6	45.8	23.3	42.3	42.3	84.6	59.8

BEARING AREAS ARE IN SQUARE FEET.

* AREA APPLIES TO EACH INDIVIDUAL THRUST BLOCK (2 REQ'D).

VERTICAL BEND ANCHOR BLOCK CONCRETE VOLUME			
PIPE SIZE (INCH)	VERTICAL DEFLECTION ANGLE & PIPE WORKING PRESSURE		
	11.25°	22.5°	45.°
	235 psi	235 psi	235 psi
2	0.04	0.07	0.14
4	0.14	0.28	0.56
6	0.32	0.64	1.26
8	0.57	1.14	2.23
10	0.89	1.78	3.49
12	1.29	2.56	5.02
14	1.75	3.49	6.84
16	2.29	4.55	8.93
18	2.89	5.76	11.30

VOLUMES ARE IN CUBIC YDS.

NOTES:

1. PLACE THRUST BLOCKS WITH BEARING SURFACE AGAINST UNDISTURBED EARTH OR COMPACTED FILL.
2. USE CONCRETE WITH 2,500 PSI OR HIGHER 28 DAY COMPRESSIVE STRENGTH.
3. FORM THRUST BLOCK SIDES.
4. DESIGN FOR ALLOWABLE SOIL BEARING PRESSURE OF 1,000 PSF.
5. PROVIDE RATIO OF "X" TO "Y" (THRUST BLOCK AREA) NO GREATER THAN 3:1.
6. ALLOW MINIMUM 3 DAYS CURE TIME FOR CONCRETE PRIOR TO PRESSURIZING SYSTEM.
7. FORM THRUST BLOCKS WITHOUT INTERFERING WITH NUTS & BOLTS OF FITTINGS.
8. SEE PIPE CONDITIONS ON SHEET S-421.
9. MECHANICAL JOINT RESTRAINTS MAY BE USED AS ALTERNATE TO CONCRETE THRUST BLOCKS, SEE SHEET S-423.
10. GREASE AND WRAP BOLTED CONNECTIONS, FITTINGS, AND VALVES IN AREAS OF HIGH SOIL CORROSIVITY.
11. USE STAINLESS STILL BOLTS IN AREAS WITH HIGH WATER TABLE
12. INSTALL CONCRETE THRUST BLOCK ON FITTINGS AND MECHANICAL JOINT RESTRAINT ON EACH JOINT OF FITTINGS.

VERTICAL BEND ANCHOR BLOCK

NOTES:

1. DESIGN FOR 235 PSI .
2. MAINTAIN MIN. 3 INCHES OF COVER AROUND REBAR.
3. MAINTAIN MIN. 6 INCHES SEPARATION BETWEEN REBAR.
4. USE (1) # 4 BAR FOR PIPE SIZES UP TO 8 INCHES. MIN. EMBEDMENT DEPTH (L_{dh}): 12 INCHES.
5. USE (2) # 4 BARS FOR PIPE SIZES 10 INCHES THROUGH 12 INCHES. MIN. EMBEDMENT DEPTH (L_{dh}): 12 INCHES.
6. USE (2) # 5 BARS FOR PIPE SIZES 14 INCHES THROUGH 16 INCHES. MIN. EMBEDMENT DEPTH (L_{dh}): 15 INCHES.
7. USE (2) # 6 BARS FOR PIPE SIZES 18 INCHES. MIN. EMBEDMENT DEPTH (L_{dh}): 18 INCHES.

DRAWING NOT TO SCALE

PREPARED BY: JONES AND DEMILLE ENGINEERING, INC.

NORTH LOGAN CITY STANDARD DRAWING

NORTH LOGAN CITY
2525 N 600 E
NORTH LOGAN, UT 84341
(435) 752-1310
northlogancity.org

THRUST BLOCKS TABLES

UPDATED: 1/16/2024

STANDARD DRAWING No.
CW-7
APPROVED:
DATE: -- BY: --

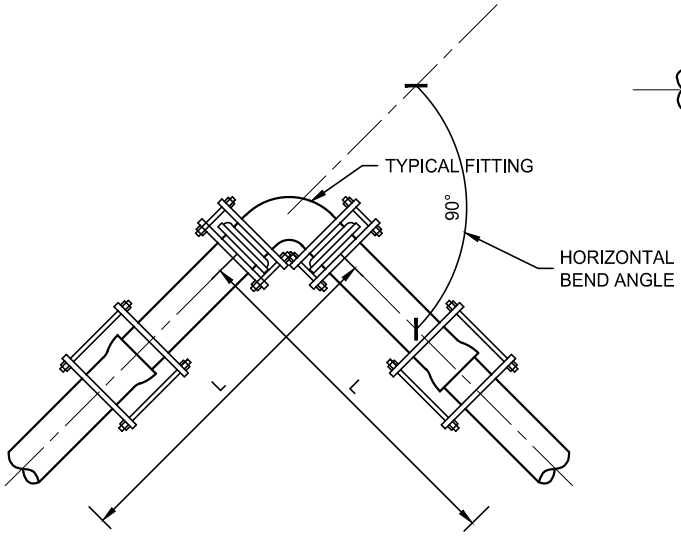

HORIZONTAL BEND

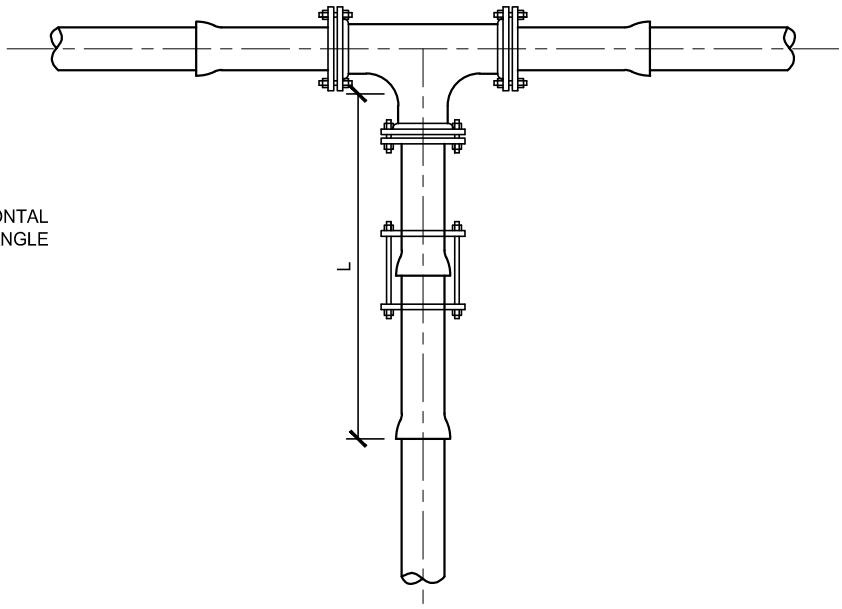

TEE

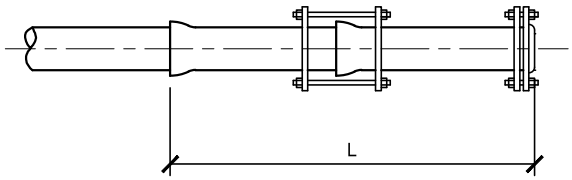

DEAD END

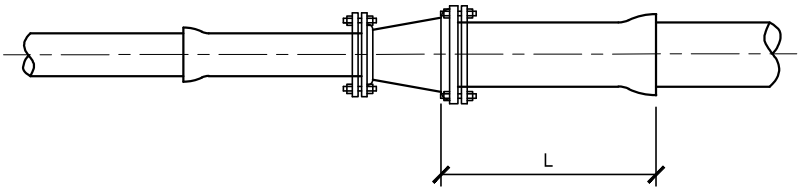

REDUCER

NOTES:

1. RESTRAIN ALL JOINTS WITHIN DISTANCE "L".
2. PROVIDE RESTRAINED JOINTS ON FITTING.
3. DISTANCE REQUIRED FOR JOINT RESTRAINTS DEPENDS ON FITTING TYPE, SOIL TYPE AND WORKING PRESSURE.
4. DESIGN CRITERIA:
   a. WORKING PRESSURE: 235 p.s.i.
   b. SAFETY FACTOR: 1.5
   c. SOIL TYPE: CLAY
   d. DEPTH OF COVER (TOP OF PIPE): 4'
   e. PIPE TYPE: PVC
   f. TRENCH TYPE: 5
5. PROVIDE DISTANCE "L" REQUIRED FOR JOINT RESTRAINTS IN ACCORDANCE WITH MANUFACTURER'S RECOMMENDATIONS, OR BY MINIMUM LISTED IN TABLES ON THIS SHEET.
6. FOR OTHER FITTINGS, CONTACT ENGINEER.
7. USE STAINLESS STEEL BOLTS REQUIRED IN AREAS WITH HIGH WATER TABLE.
8. USE RELATED SPEC SECTION 33 14 12. WATER UTILITY SYSTEM SPECIFICATION.
9. IF CONTRACTOR WANTS TO CHANGE RESTRAINT LENGTHS, ENGINEER NEEDS SUBMITTAL FROM MANUFACTURER.
10. GREASE AND WRAP BOLTED CONNECTIONS, FITTINGS, AND VALVES IN AREAS OF HIGH SOIL CORROSIVITY.

DRAWING NOT TO SCALE

PREPARED BY: JONES AND DEMILLE ENGINEERING, INC.

NORTH LOGAN CITY STANDARD DRAWING

NORTH LOGAN CITY
2525 N 600 E
NORTH LOGAN, UT 84341
(435) 752-1310
northlogancity.org

RESTRAINED JOINTS

UPDATED: 1/16/2024

STANDARD DRAWING No.
CW-8

APPROVED:
DATE: -- BY: --

RESTRAINT LENGTH (L) FOR HOR. BENDS					
	PIPE BEND ANGLE & PIPE WORKING PRESSURE				
PIPE SIZE (INCH)	HOR. BEND (90°) 200 psi	HOR. BEND (45°) 200 psi	HOR. BEND (22.5°) 200 psi	HOR. BEND (11.25°) 200 psi	DEAD END 200 psi
2	6	3	2	1	13
4	13	6	3	2	29
6	18	8	4	2	42
8	23	10	5	3	54
10	28	12	6	3	67
12	33	14	7	4	79
14	38	16	8	4	91
16	43	18	9	5	102
18	47	20	10	5	114

RESTRAINT LENGTH IN FEET.

RESTRAINT LENGTH (L) FOR TEES									
BRANCH PIPE SIZE (INCH)	NOMINAL PIPE SIZE ALONG RUN (INCH) PIPE WORKING PRESSURE								
	2 200 psi	4 200 psi	6 200 psi	8 200 psi	10 200 psi	12 200 psi	14 200 psi	16 200 psi	18 200 psi
2	0	0	0	0	0	0	0	0	0
4	21	10	1	0	0	0	0	0	0
6	37	29	23	17	10	4	0	0	0
8	50	44	39	34	29	25	19	14	9
10	63	59	55	51	47	43	39	35	31
12	76	72	68	65	62	59	55	52	48
14	88	85	82	79	77	74	71	68	65
16	100	97	95	92	90	87	85	82	79
18	113	110	108	106	103	101	99	97	94

RESTRAINT LENGTH IN FEET.

RESTRAINED LENGTH (L) FOR REDUCERS									
SMALLER PIPE SIZE (INCH)	LARGER PIPE SIZE (INCH) & WORKING PRESSURE								
	2 200 psi	4 200 psi	6 200 psi	8 200 psi	10 200 psi	12 200 psi	14 200 psi	16 200 psi	18 200 psi
2		24	39	52	65	77	89	101	113
4			22	39	55	68	82	95	108
6				22	41	57	72	86	100
8					24	42	60	75	90
10						23	43	60	77
12							24	44	63
14								23	44
16									24
18									

CALCULATED RESTRAINT LENGTH IN FEET.

RESTRAINED LENGTH OCCURS ON LARGE END OF REDUCER.

DRAWING NOT TO SCALE

PREPARED BY: JONES AND DEMILLE ENGINEERING, INC.

NORTH LOGAN CITY STANDARD DRAWING

NORTH LOGAN CITY
2525 N 600 E
NORTH LOGAN, UT 84341
(435) 752-1310
northlogancity.org

RESTRAINED JOINTS TABLES

UPDATED: 1/16/2024

STANDARD DRAWING No.
CW-9
APPROVED:
DATE: -- BY: --

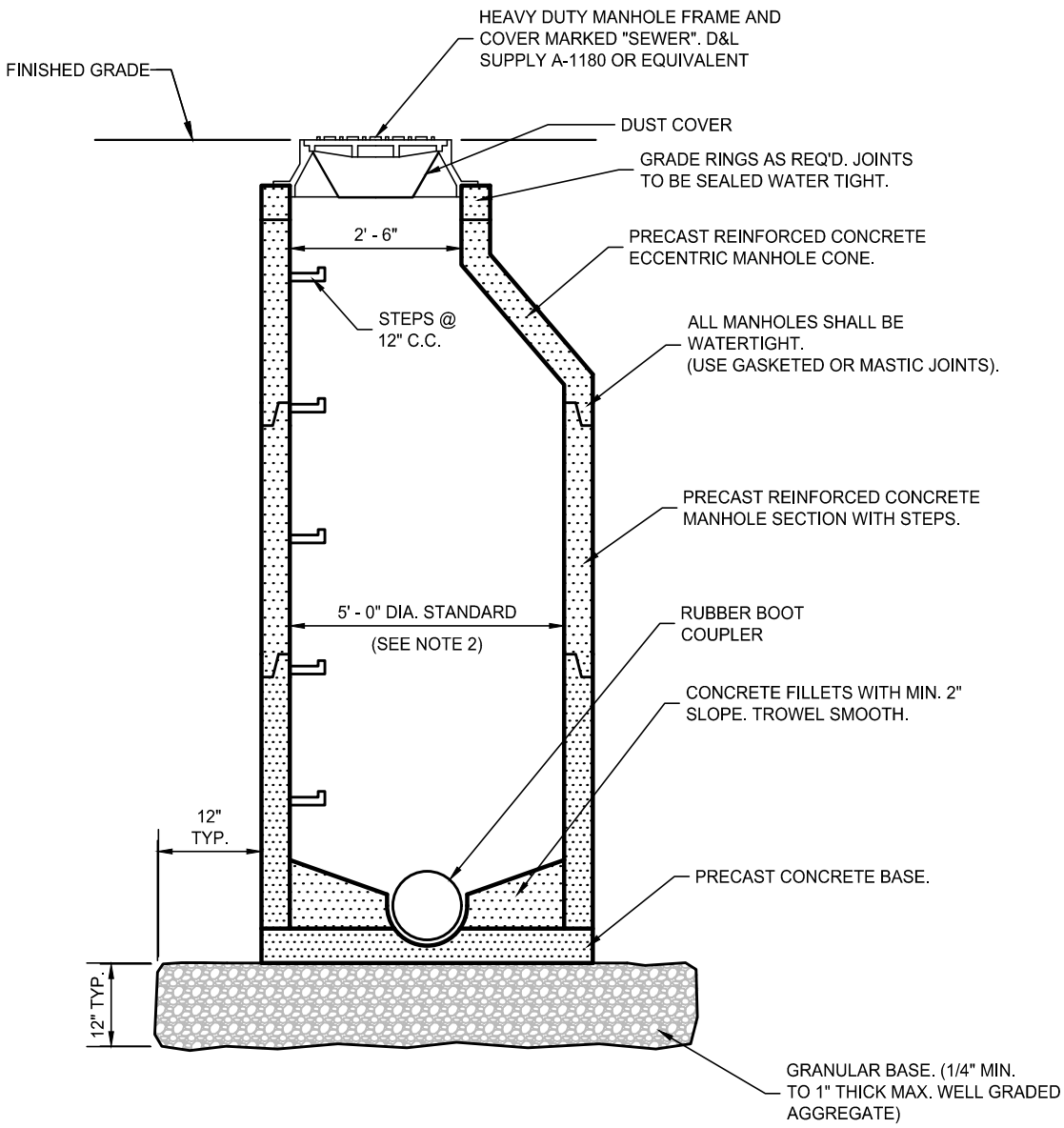

NOTE:
1. 5' MAHOLES ARE STANDARD
2. 4' MANHOLES ONLY APPLICABLE IN STRAIGHT THROUGH MANHOLES. NO CORE DRILLING OR ADDING LINES TO A 4' MANHOLE. MUST HAVE PRIOR APPORVAL FOR 4' MANHOLE.
3. NO "DOGHOUSE" STYLE MANHOLES WITHOUT PRIOR APPROVAL.
4. WHEN MANHOLE IS WITHIN PAVED STREET, CONSTRUCT CONCRETE COLLAR.

DRAWING NOT TO SCALE

PREPARED BY: JONES AND DEMILLE ENGINEERING, INC.

NORTH LOGAN CITY STANDARD DRAWING

NORTH LOGAN CITY
2525 N 600 E
NORTH LOGAN, UT 84341
(435) 752-1310
northlogancity.org

SANITARY SEWER MANHOLE

UPDATED: 1/16/2024

STANDARD DRAWING No.
SS-1
APPROVED:
DATE: -- BY: --

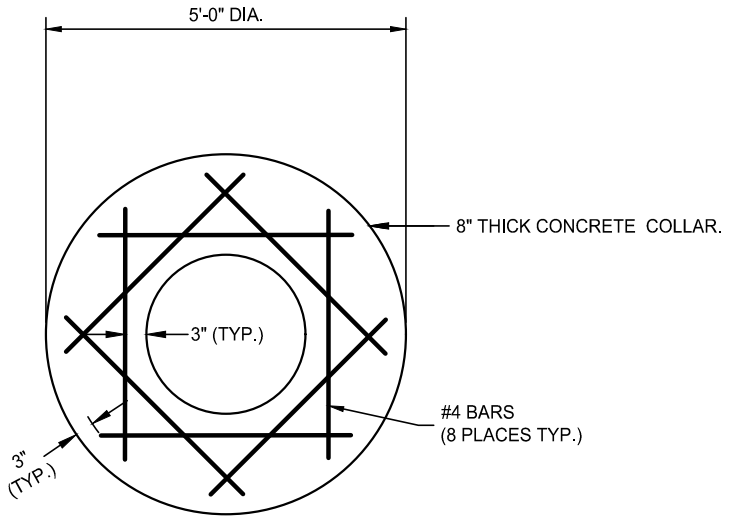

PLAN

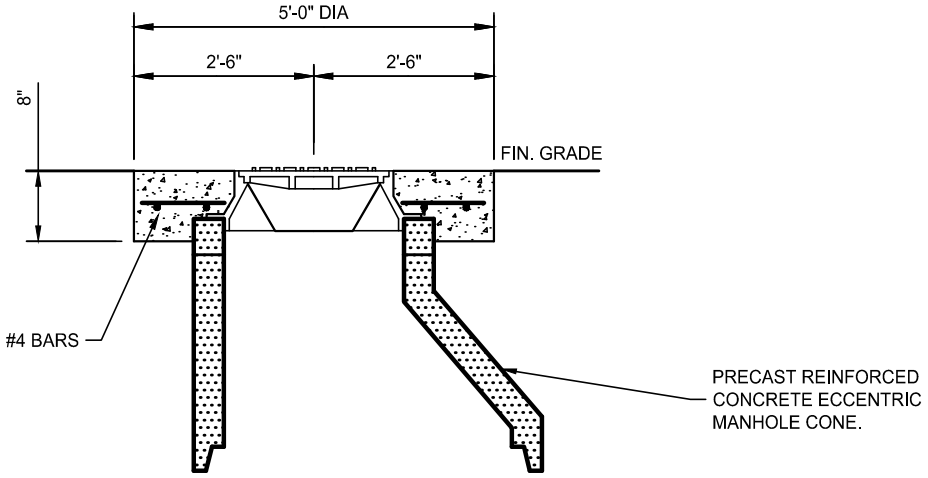

SECTION

NOTES:
1. USE GRADE RINGS AS NECESSARY TO LEVEL AND ADJUST LID AND FRAME TO FINISH GRADE. (1/4" BELOW FINISH GRADE)
2. CONCRETE COLLAR REQ'D FOR MANHOLES WITHIN PAVED STREETS.

DRAWING NOT TO SCALE

PREPARED BY: JONES AND DEMILLE ENGINEERING, INC.

NORTH LOGAN CITY STANDARD DRAWING

NORTH LOGAN CITY
2525 N 600 E
NORTH LOGAN, UT 84341
(435) 752-1310
northlogancity.org

CONCRETE MANHOLE COLLAR

UPDATED: 1/16/2024

STANDARD DRAWING No.
SS-2
APPROVED:
DATE: -- BY: --

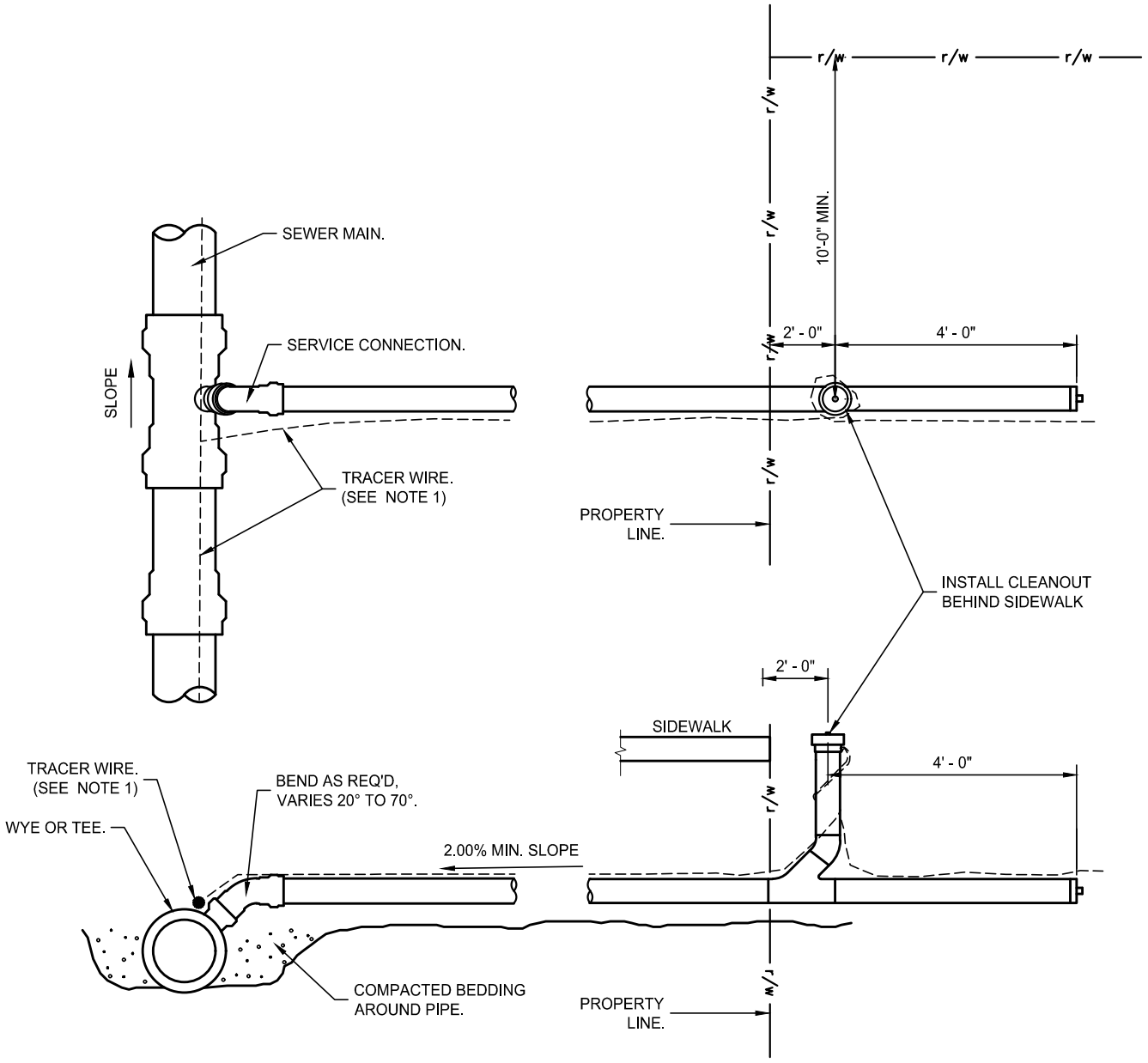

NOTES:
1. TRACER WIRE REQUIRED ON ALL SEWER PIPE FORM MAIN TO FOUNDATION.
2. SEWER CLEANOUTS 2' BEHIND SIDEWALK, OUTSIDE FOUNDATION, EVERY 100' AND/OR AT EACH BEND IN THE SEWER LATERAL

DRAWING NOT TO SCALE

PREPARED BY: JONES AND DEMILLE ENGINEERING, INC.

NORTH LOGAN CITY STANDARD DRAWING

NORTH LOGAN CITY
2525 N 600 E
NORTH LOGAN, UT 84341
(435) 752-1310
northlogancity.org

SANITARY SEWER CONNECTION

UPDATED: 1/16/2024

STANDARD DRAWING No.
SS-3
APPROVED:
DATE: -- BY: --

SUBDIVISION AGREEMENT - IMPROVEMENT DEVELOPMENT
(SAID AGREEMENT)

THIS AGREEMENT is entered into this_____day of_____,20__ between_____hereinafter referred to as the "Developer" and the City of North Logan, hereinafter referred to as the "City".

WHEREAS the Development Plan for the subdivision development has been approved by the City for construction.

Subdivision Development Plan Approved by City Council_____(date)
Ancillary Agreement (if necessary) Approved by City Council_____(date)

Said Subdivision Development Plan and/or Ancillary Agreement being on file in the office of the North Logan City Engineer is (are) hereby incorporated by reference herewith; and

WHEREAS, said Development Plan and/ancillary Agreement indicates improvements to be made in access, streets, water, sewer and/or utilities, etc. hereinafter referred to as "infrastructure"; and

WHEREAS, it is necessary in the interest of public welfare that infrastructure improvements made be constructed in accordance with the specifications set forth in said plan and as provided by North Logan City Ordinances and design standards; and

WHEREAS, in accordance with said regulations of the City of North Logan the Developer is required to furnish security to guarantee the completion of required improvements. Now, therefore, to induce the City of North Logan to approve said plan and allow use of city-owned utilities and access and/or other improvements, the Developer does hereby unconditionally promise and agree to and with the City of North Logan as follows:

A. **Schedule - Improvements to Be Done by Parts:** It is agreed that after approval of said plan, the developer will construct all improvements as required to the furthermost structure in said development. All infrastructure improvements as shown in the development plan and/or ancillary agreement, and as required by North Logan City Ordinances will be completed in Parts in accordance with the attached Construction Checklist. Infrastructure improvements shall be completed approximately in accordance with the following estimated schedule:

   Part One (Generally underground infrastructure improvements including but not limited to: staking and layout of sub-grade, water and sewer systems and storm drainage systems)
   Planned Completion by_____(date).

   Part Two (Generally Road improvements including but not limited to: roadway and street sections,initial road base courses, concrete curb and gutter, and final base course for roads)
   Planned Completion by_____(date).

   Part Three (Generally final improvements including but not limited to: surface course (normally asphalt) for all roads, sidewalks and final grading and cleanup)
   Planned Completion by_____(date).

B. **When Building Permits Will Be Allowed:** No building permits will be issued by the City for any residents within the subdivision until satisfactory completion of Part_____. Final inspection of Part Three shall only be expected by the Developer to be at a time of the year when there is a good chance for the inspection to take place and the inspector able to visually see the work (i.e. not covered with snow).

SUBDIVISION AGREEMENT - IMPROVEMENT DEVELOPMENT
(SAID AGREEMENT)

C. **Improvement Bond to be Established:** In accordance with City Ordinance, the Developer tenders to the City an improvement bond for security of the type(s) mark below (check all those that apply):

o Bond with Corporate Surety
o Escrow Account
o Irrevocable Letter of Credit
o Deposit with Municipality
o Other _____
("Other" approved by City Council on_____date)

Required Bond - Part 1 (Underground and Storm Water) $_____
Required Bond - Part 2 (Road/Street Cross Sections, Curb & Gutter) $ _____
Required Bond - Part 3 (Surface Course, Sidewalks, Cleanup, Other) $_____

Total Required Bond All Parts (Initial Amount of All Improvements) $_____
10% to be Retained - post construction $_____
(Total Bond Required) $_____

(Total Bond Established) $_____

which amount is not less than 110% of the estimated cost of the construction of said improvements.

D. **Process for Release of Improvement Security. The** City will release to the Developer the applicable security upon the completion of the infrastructure improvements as each Part is completed during construction, based on a written request from the Developer using North Logan City form entitled *"Application for Partial Release of Subdivision Improvement Bond"* - which identifies work completed and amount requested to be released. Release of security for each Part will be within 30 days of City approval of Developer's request. Developer is required to have all required fees applicable to the subdivision paid to the City prior to the release of any security.

E. **Warranty Period:** The City will hold 10% of the initial total security for a one-year warranty period from date of final inspection (Post Construction Final Inspection) and acceptance of all infrastructure improvements (completion of Part 3). At the completion of the one-year warranty period another final inspection (Post Warrantee Final Inspection) will be conducted at the request of the developer in writing. If the developer waits until after one year has lapsed the warranty will extend until the date of the Final Inspection. Any noted deficiencies in said final inspections must be corrected prior to the release of the remaining security held by the City. Balance of security will be released within 30 days of acceptance by City.

F. **Remedies for Failure to Comply:** In the event that the Developer shall fail or neglect to fulfill the obligations under this agreement within a reasonable time from the scheduled completion dates for each part, the following actions may be taken at the discretion of the City.

- The City shall notify the Developer, by Notice of Default, of any failed or unfulfilledobligations.
- The Developer shall have thirty (30) days from the date of said Notice of Default inwhich to correct deficiencies to the satisfaction of the City Engineer.
- In the event that the Developer fails to correct identified deficiencies within thosethirty (30) days, the City may construct or cause to be constructed said infrastructure

SUBDIVISION AGREEMENT - IMPROVEMENT DEVELOPMENT
(SAID AGREEMENT)

improvements as required by North Logan City Ordinances and/or the Development Plan.

- The Developer as security holder shall be liable to pay to and indemnify the City, upon completion of said improvements, the total costs incurred by the City. The total cost to the City shall include but not be limited to actual construction costs, engineering, legal and contingent costs, together with any damages which the City may sustain on account of the failure of the Developer to carry out and execute all of the provisions of this agreement which said sums are secured by the herewith attached security.
- In the event the Developer does not pay said sum to the City of North Logan within sixty (60) days after demand, the City may proceed and foreclose on said security.
- In the event of errors or omissions in the design of the infrastructure improvements or deferring site conditions, the Developer is solely responsible to correct such deficiencies.

IN WITNESS WHEREOF, the parties hereto set their hands the day and year first above written.

CITY OF NORTH LOGAN	DEVELOPER
By_____	By _____
Date_____	Date _____

Required Attachments:
1. Copy of the City's Construction Checklist
2. Copy of the Developer's Cost Estimate for all Infrastructure Improvements
3. Copy of the Developer's Applicable Security Documents
4. Copy of the Developer's Estimated Schedule for Construction of Improvements

CHAPTER 2300. Public Street Lighting Design Standards

Chapter Outline

Chapter 2300 - Public Street Lighting Requirements

Presents the minimum design criteria & standards to develop and produce construction documents regarding the extension and development of the public street lighting system. The purpose of this chapter is to outline the process to those design professionals involved in land development projects on how to incorporate the City's public street lighting requirements into their project. This document contains general information regarding the processes that are required during the construction document preparation; plan review, approval and permitting stages of land development.

Section 2301 - General Information

2301.1 North Logan City along with Rocky Mountain Power owns, operates and maintains street lighting for the public streets within the corporate limits with the City. Information regarding North Logan City system can be obtained from various Public Works Department.

2301.2 North Logan City's system has been developed through a combination of Capital Improvement Projects (C.I.P.) and private/public land developments, which include both, land subdivisions or individual lot or tract type of land development.

2301.3 The Public Works Department is responsible for the operations and maintenance of public street lighting.

2301.4 Questions regarding the operations of the public street lighting system should be directed to the Public Works Director.

Section 2302 - City Code, Policies & Regulations

2302.1 The design professional should be aware of and become familiar with the following aspects of the various regulations that pertain to land development within the North Logan City service area.

Section 2303 - City Code

2303.1 Title 12, Land Use contains information regarding the construction of public street lighting in association with private land developments. Title 12D pertains to land subdivision Projects, while Title 12C deals with individual lot or parcel development (non-subdivision) projects.

2303.2 Title 12C, Building Regulations contains information regarding light pollution and light trespass. Title 12C, Outdoor Light Control deals primarily with private site lighting and does not apply to the lighting of public streets.

Section 2304 - City Policy

2304.1 All land development projects, building construction projects, and subdivisions, as formalized by the City Code are required to provide street lighting that meets North Logan City standards, for all public streets within, adjacent or affected by the proposed project.

2304.2 All land developers, builders, and land sub-dividers shall be fully responsible to fund and install street lights, basses, conduit, meters, controls, coordinate with Rocky Mountain Power, and any other

CHAPTER 2300. Public Street Lighting Design Standards

necessary improvements to have a finished public Street Lighting System, which can then be accepted by the City if found to meet the standards contained in this chapter of the Design Standards Technical Manual.

Section 2305 - Unused

Section 2306 - Public Street Lighting System Design

2306.1 General Information: In addition to the APWA Standards and North Logan City's amendments to APWA; North Logan City has also established the City Design Standards Technical Manual (DSTM).

2306.2 Design Criteria: It is the North Logan City's intention to provide illumination of the public street transportation system in accordance with the "American National Standard Practice for Roadway Lighting" (RP-8-00) as published by American National Standards Institute (ANSI) and the Illuminating Engineering Society of North America (IESNA).

2306.3 Copies of RP-8-00 are available by contacting the Illuminating Engineering Society of North America at 120 Wall Street, New York, New York 10005 or at http://www.iesna.org.

2306.4 Design Method: While the RP-8-00 Standard Practice contains three different design criteria methodologies for designing roadway lighting, designs in the City are to utilize the "Illuminance Criteria" method.

2306.5 Minimum Values: Tables 2 & 22, of RP-8-00 provide the minimum recommended values that are to be met by all public street lighting designs within North Logan City.

2306.6 Maximum Values: Designs shall not exceed the recommended Uniformity Ratio Value for the appropriate street classification.

2306.7 The maximum light level shall not exceed twenty-five percent (25%) of the recommended "minimum maintained average values" of Table 2, RP-8-00.

2306.8 Footcandles Required: Calculations provided to prove conformance to the minimum recommended values in Table 2 of RP-8-00 are to be in footcandles (fc).

2306.9 Design Grid: The Calculation/Measurement Grid shall extend to the face of curb on both sides of the public street rather than to the edge of pavement as described in Annex A of RP-8-00. This includes but is not limited to public street cul-de-sacs, traffic circles or roundabouts and traffic calming devices

2306.10 Intersection Levels: Intersection lighting levels shall be a minimum of the sum of the values recommended for each public street that forms the intersection. See Table 22, RP-8-00. For the purposes of this analysis, the area is defined by the extension of the face of curb alignment across the street to match the opposing face of curb alignment. Roundabouts shall be considered and analyzed as an intersection.

2306.11 Pedestrian Area Calculations: Separate calculations for the pedestrian areas are not required, even if the pedestrian sidewalk is separated from the street curb.

CHAPTER 2300. Public Street Lighting Design Standards

2306.12 Street Classifications: The RP-8-00 Standard Practice document classifies the various types of streets found in the transportation system into roadway classifications. The following Table 22.1 provides the conversions between the RP-8-00 classes to the equivalent North Logan City designation.

Table 22.1 Street Classifications

RP-8-00 Designation	North Logan City Equivalent
Freeway Class A	None
Freeway Class B	None
Expressway 6 or 4-Lane	Parkway
Major 6 or 4-Lane	Arterial
Collector 4 or 2-Lane	Collector
Local	Local

2306.13 Pedestrian Areas: The RP-8-00 Standard also defines areas in which pedestrian traffic may come into contact or conflict with vehicular traffic, such as at intersections or mid-block crossings. The following examples specific to North Logan City help clarify the application of these definitions.

2306.13.1 High: Areas with significant numbers of pedestrians expected to be on the sidewalks or crossing the streets during darkness. Examples are in and around the North Logan City Center, adjacent to regional shopping areas such as Wal-Mart; areas around Main Street and the Children's Museum as well as around cinema complexes.

2306.13.2 Medium: Areas where lesser numbers of pedestrians utilize the streets at night. North Logan City examples would be office complexes, apartments or multi-family residences and neighborhood shopping centers that are usually located at arterial street intersections.

2306.13.3 Low: Areas with very low volumes of night pedestrian usage. In North Logan City, these are typified by low-density residential developments such as suburban ranch or single residential zoning districts.

2306.14 Pavement Classification: RP-8-00 Standard Practice also defines the reflectance characteristics of the roadway surface.

2306.14.1 The pavement classes to use for fixed roadway lighting in the City are R2 & R3.

Section 2307 - Lighting Analysis

2307.1 All land development projects that are required to improve or install public street lighting shall conduct a lighting analysis of the existing conditions, the proposed improvements and any future street widening, which is based on the adopted North Logan City Transportation Plan. The result of this analysis shall be the preparation of photometric calculation sheets based upon the streetlight design sheets and shall be included as part of the construction document submittals.

2307.2 Existing Public Lighting: Where the land development project is adjacent to or adjoining an existing public street with existing public street lighting, the public street improvements associated with the proposed project shall not result in degradation of the existing lighting levels below the required minimum levels. Projects in which the lighting analysis shows that the existing lighting levels will be impacted negatively, the proposed project shall improve the existing public street lighting system to meet the required standards.

CHAPTER 2300. Public Street Lighting Design Standards

2307.3 An analysis of the existing public streets adjoining the proposed project shall be performed. The area to be examined shall be between the face of curbs.

2307.4 Public Street Widening: A separate "proposed" analysis of the public streets to be widened by the land development project is required. Analysis shall include all right turn lanes and tapers.

2307.5 Future Street Widening: A separate "future" analysis will be required when the public street does not meet the ultimate street width, such as when the opposing side of the public street has not been widened or improved. The analysis shall utilize the future street widths and shall propose the locations of the future streetlights to meet the required lighting levels.

2307.6 Land development projects that include or adjoin a public street intersection shall include separate intersection(s) calculations with all the required lighting analysis.

Section 2308 - Design Standards, Specifications & Guidelines see APWA Section 26 56 19

2308.1 All adjacent streetlight poles, mast arms and luminaires shall be of the same height, length and type when installed on local streets unless otherwise directed and approved by the Public Works Director.

2308.2 Luminaires: North Logan City has hundreds of luminaires in the public streetlight system and in order to efficiently manage the system the Public Works Department has standardized the luminaire specification.

2308.3 All luminaires installed on the public street lighting system must follow the North Logan City Design standard.

2308.4 All luminaires installed are to be

2308.4.1 Classified as a "full – cutoff";

2308.4.2 Housings are to be fitted with power doors for mounting ballast assemblies, etc.;

2308.4.3 Ballast shall be 120/240 volt three coils with an isolated lag

2308.5 Luminaires installed in the City street lighting system must comply with Table 23.2. Alternative Luminaires must be approved prior by Public Works Department.

Table 23.2 City Luminaries

Zone	Style of Light (LED)	Pole Style
MR7 - Mixed Residential 7	(Acorn) LP-1	16'Alluminum fluted pole with Huntington Style Clam Base (PER NLC SPEC)
MR8 - Mixed Residential 8	(Acorn) LP-1	16'Alluminum fluted pole with Huntington Style Clam Base (PER NLC SPEC)
RS - Recreation / School	(Acorn) LP-1	Charleston (smooth pole w/ smooth base)
CCA - City Center Adjacent	(Acorn) LP-1	16'Alluminum fluted pole with Huntington Style Clam Base (PER NLC SPEC)

CHAPTER 2300. Public Street Lighting Design Standards

CCC - City Center Commercial	(Acorn) LP-1	16'Alluminum fluted pole with Huntington Style Clam Base (PER NLC SPEC)
DT - Downtown	(Acorn) LP-1	16'Alluminum fluted pole with Huntington Style Clam Base (PER NLC SPEC)
(A-10) Agricultural 10 ac. min.	Cobra Head	Direct Buried Wood Pole
(CC) Community Commercial	(Acorn) LP-1	16'Alluminum fluted pole with Huntington Style Clam Base (PER NLC SPEC)
(PR) Professional	(Acorn) LP-1	16'Alluminum fluted pole with Huntington Style Clam Base (PER NLC SPEC)
(CG) General Commercial	(Acorn) LP-1	16'Alluminum fluted pole with Huntington Style Clam Base (PER NLC SPEC)
(HOSP) Hospital	(Acorn) LP-1	16'Alluminum fluted pole with Huntington Style Clam Base (PER NLC SPEC)
(M-2) High Tech Mfg. and Research	Cobra/Mongoose Head	Anchor Base Metal Pole
(MC) Mfg. Heavy Commercial	Cobra/Mongoose Head	Anchor Base Metal Pole
(MXG Mixed Use General	(Acorn) LP-1	16'Alluminum fluted pole with Huntington Style Clam Base (PER NLC SPEC)
(R-1-10) Res. Single Fam.	(Acorn) LP-2	14'Alluminum fluted pole with Huntington Style Clam Base (PER NLC SPEC)
(R-1-12) Res. Single Fam.	(Acorn) LP-2	14'Alluminum fluted pole with Huntington Style Clam Base (PER NLC SPEC)
(R-1-15) Res. Single Fam.	(Acorn) LP-2	14'Alluminum fluted pole with Huntington Style Clam Base (PER NLC SPEC)
(R-1-20) Res. Single Fam.	(Acorn) LP-2	14'Alluminum fluted pole with Huntington Style Clam Base (PER NLC SPEC)
(R-1-30) Res. Single Fam.	(Acorn) LP-2	14'Alluminum fluted pole with Huntington Style Clam Base (PER NLC SPEC)
(RB) Residential Business	(Acorn) LP-2	14'Alluminum fluted pole with Huntington Style Clam Base (PER NLC SPEC)
(RE-2) Res. Estate	(Acorn) LP-2	14'Alluminum fluted pole with Huntington Style Clam Base (PER NLC SPEC)
(RM) Residential Multi Family	(Acorn) LP-2	14'Alluminum fluted pole with Huntington Style Clam Base (PER NLC SPEC)
(RE-1) Res. Estate Min 1 acre lot	(Acorn) LP-2	14'Alluminum fluted pole with Huntington Style Clam Base (PER NLC SPEC)

2308.6 Lamps: All lamps shall be (LED) or equivalent high efficacy unless directed otherwise.

CHAPTER 2300. Public Street Lighting Design Standards

2308.7 LED lamps shall conform to the requirements of North Logan City Standard Details.

Section 2313 - Photometrics
2313.1 The photometric results of the lighting analysis shall be shown on plan sheets that utilize the civil engineering base sheets for the proposed public street improvements. The X and/or Y coordinates shall match the stationing on the civil engineering improvement plans.

Section 2314 - Location
2314.1 The public streetlight system shall be designed for, and installed in the public street right-of-way. If existing conditions are such that the streetlight system cannot be located within the right-of-way, Public Utilities Easements (P.U.E.) shall be dedicated, or cause to be dedicated for the public facilities.

2314.2 Local Streets: Streetlights are typically installed on the south or west side of the public street.

2314.3 Collector Streets: Streetlights are typically installed on the south or west side of the public street.

2314.4 Major Streets: Streetlights are typically installed on both sides of the major streets with staggered spacing, or may be located in center raised median.

2314.5 Lot Lines: Streetlights in residential areas should be installed on the intersecting lot lines.

2314.6 Intersections: There shall be at least one streetlight located at each public street intersection.

2314.7 Curb Return Locations: Street light poles shall not be located within the radius of a corner at a public street intersection.

2314.8 Cul-De-Sac's: Cul-de-sac type streets shall have streetlights installed within the cul-de-sac to meet the recommended light levels if the radius point of the cul-de-sac is fifty-seven feet (57') or greater from the centerline of the intersecting street.

2314.9 Adjacent to Sidewalk: Street light foundations and lighting control cabinet pads shall be adjacent to the sidewalk when feasible. Pull boxes shall be installed one foot (1') behind sidewalk when feasible.

2314.10 Curb Offsets: Street light poles shall be offset from the back of curb per the following:

2314.11 For streetlights installed on a local street, the poles shall be offset from the back of curb a minimum of three feet (3') and a maximum of six feet (6').

2314.12 For streetlights installed on collector or major streets, the poles shall be offset from the back of curb seven and one half foot (7.5').

2314.13 In areas where concrete curbing (vertical or ribbon) does not exist, the streetlight poles shall be offset eight feet (8') from the edge of pavement.

2314.14 Luminaire Overhang: Luminaires shall overhang the public street paving a minimum of one-foot (1') unless otherwise approved and noted on the improvement plans

2314.15 Pole Spacing: Pole spacing shall be based on the results of the lighting analysis.

Section 2315 - Clearances

CHAPTER 2300. Public Street Lighting Design Standards

2315.1 The following minimum clearances are to be met around all streetlight poles:

2315.2 Local Streets: A minimum of three-feet (3') of clearance shall be maintained around all streetlight pole foundations installed on local streets.

2315.3 Collector & Major Streets: A minimum of four-feet (4') of clearance shall be maintained around all street light pole foundation installed on collector or major streets.

> 2315.3.1 Exception: The exception to the required four feet (4') of clearance involves public utilities. The normal clearance between a public utility and the street pole foundation is one foot (1'), the minimum clearance allowed is six-inches (6").

2315.4 Fire Hydrants: There shall be a minimum of five-feet (5') of clearance between any street light pole or lighting control cabinet and a fire hydrant.

2315.5 Driveways: There shall be a minimum of six-feet (6') of clearance between any street light pole or lighting control cabinet and a driveway as measured from the exterior driveway wing contraction joint.

2315.6 Landscaping – Trees: There shall be a minimum of eighteen feet (18') of clearance as measured from base of tree trunk to outside edge of between any street light pole or lighting control cabinet.

2315.7 Landscaping – Shrubs: There shall be a minimum of seven-feet (7') of clearance as measured from centerline of shrubs and outside of street light pole or lighting control cabinet.

2315.8 Utility Transformers: Clearances shall be maintained around the electric utility company's electrical transformer(s) in accordance with Rocky Mountain Power company's requirements. See Rocky Mountain Power Specifications book for additional information.

2315.9 Overhead Electric Facilities: The following clearances shall be maintained between street light equipment in accordance with Rocky Mountain Power Specifications.

> 2315.9.1 A minimum of six feet (6') of clearance shall be maintained between streetlight equipment and energized overhead electric lines or current carrying facilities.
>
> 2315.9.2 A minimum of three feet (3') of clearance shall be maintained between streetlight equipment and the overhead electric common neutral line.
>
> 2315.9.3 A minimum of one foot (1') of clearance shall be maintained between streetlight equipment and any other overhead utility line; this includes, but is not limited to telephone and cable television lines.

2315.10 Responsibility to Relocate: Where it is not possible to maintain the required clearances, it is the developer's responsibility to relocate any underground or overhead facilities that are in conflict with the public street lighting system.

Section 2316 - Public Street Crossings

2316.1 Where a conduit for the public street lighting or traffic signal system is required to cross an existing paved public street, the crossing shall be via a horizontal bore in conformance with North Logan City Standard or APWA unless otherwise approved.

CHAPTER 2300. Public Street Lighting Design Standards

2316.2 Where an open cut of the existing public street pavement has been approved, the trench backfills, and pavement replacement shall be in accordance with North Logan City Standard or APWA.

Section 2317 – City Center (unused)

Section 2318 - Public Street Lighting Components See APWA 26 25 19

Section 2319 - Improvement Plans - Public Street Lighting

2319.1 Basis: Public street lighting plans shall be based on the civil engineering improvement plan base sheets and shall show all existing and/or proposed off-site public improvements (i.e., public street widening, right-turn decelerations for public street intersections or private property, driveways, sidewalk ramps, public and private utilities, etc.). For those projects in which separate civil engineering design is not required (i.e., existing public street improvements), the streetlight plans shall be developed per the standards for Construction Documents as discussed in Section 100, Introduction and Purpose.

2319.2 General Notes: Public street lighting shall include the North Logan City general notes for public street lighting.

2319.3 Construction Notes: Construction notes for public street lighting shall refer to the North Logan City Standard Detail number as well as the specific specification number.

2319.4 Stationing: Stationing of public streetlight equipment or facilities shall be based on the same stationing as the civil engineering design or where civil engineering design is not required for the proposed project, stationing shall be based on a known survey monument on a public street centerline.

2319.5 Future Street Light Locations: Where future street lighting (i.e., future widening of the opposite side of the street) is utilized by a lighting analysis in order to meet the required lighting levels for the proposed project, the proposed future street light locations shall be shown on the street light design sheets.

2319.6 Addressing Street Light Facilities: The City of North Logan City requires that control cabinets be addressed. Address for new facilities will be provided during the plan review process. New facilities shall have addresses enclosed within parentheses () while existing addresses are to be enclosed in brackets [ ]. Addresses for existing facilities can be found on the approved street lighting plans for those facilities.

2319.7 Quantities List: The quantities list on the streetlight plans for the public street lighting system shall show only the number of street lighting poles and lighting control cabinets, unless otherwise directed.

2319.8 Electronic Files: Electronic files (ACAD and PDF) of the streetlight design are required to be submitted upon approval of the public streetlight design.

2319.9 Incorporation into Civil Design: When the streetlight design is in conjunction with other public works infrastructure improvements, the streetlight design sheets are to be incorporated into the civil engineering design set, the design sheets and the electronic files shall be sequentially numbered. The streetlight engineer shall coordinate with the project's civil engineer.

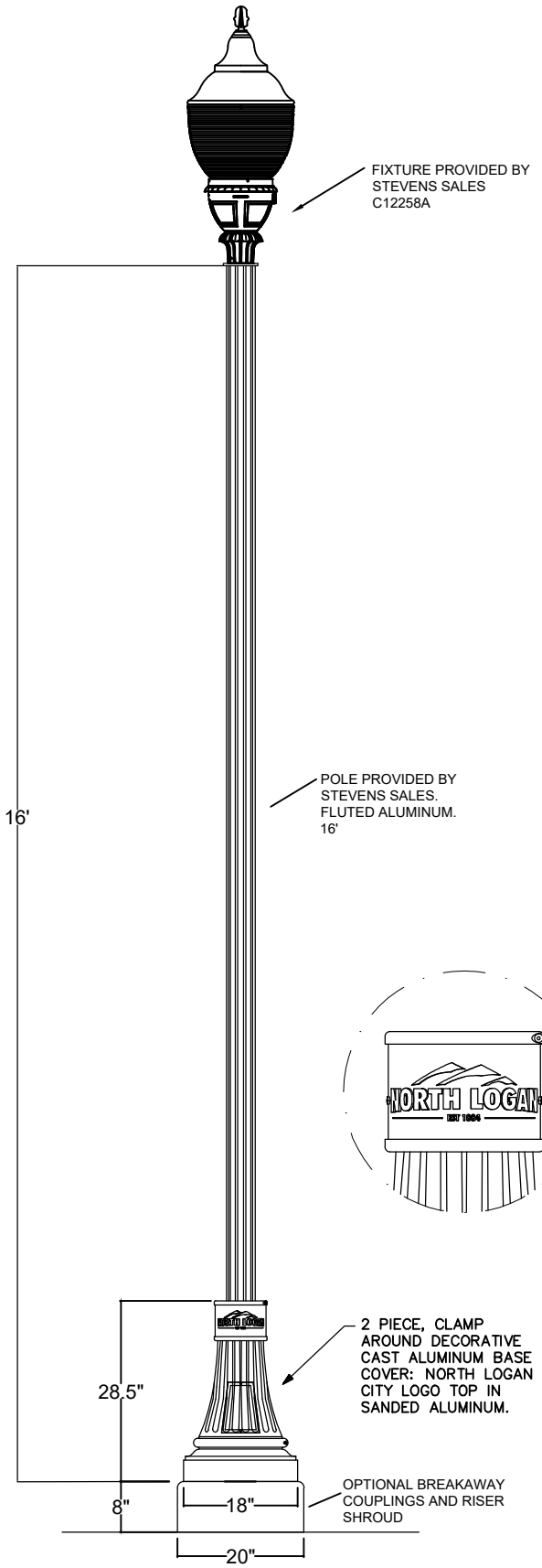

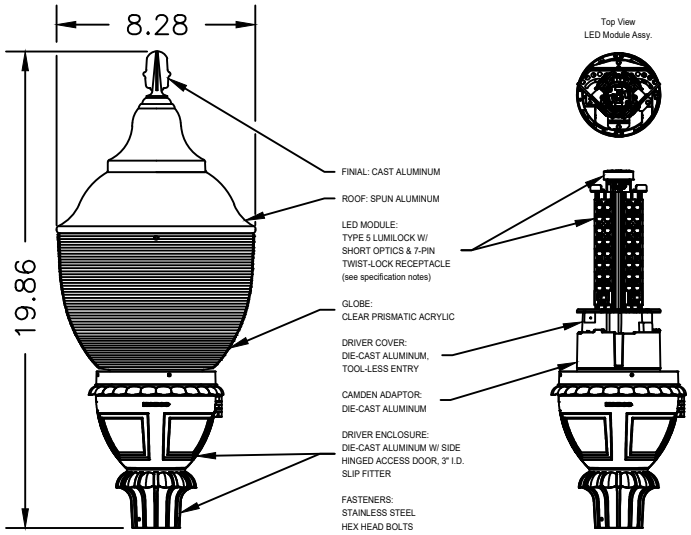

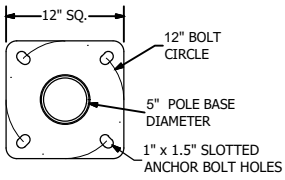

Lumilock LED Specifications:

- 64, 3000K (warm) LEDs, typical 75 Color Rendering Index (CRI), >100,000 hours of operational life (at 25°C ambient temperature & 70% lumen maintenance), injection molded Type 5 Short optical plates, IP66 rated optical system.
- Integral Philips Advance Xitanium LED driver, class 1, IP66 rated, 530mA, IntelliVolt 120-277 VAC, 50-60Hz, RoHS compliant, field replaceable 10kV/10kA surge suppression.
- Delivered lumens: 7431, Wattage: 104W.
- Field Adjustable Wattage Switch (FAWS) (see chart below for settings).

Lumilock LED Certifications:

- ETL/cETL listed to U.S. & Canada safety standards for wet locations, manufactured to ISO 9001:2008 Standards, vibration tested to ANSI C136.31 for Normal Applications, UL8750 & UL1598 compliant, LM79 & LM80 tested, DLC listed.

FAWS POSITION	LUMENS	SYSTEM WATTAGE
1	2229	29
2	3938	50
3	4607	58
4	5425	70
5	5796	76
6	6168	81
7	6465	88
8	6762	93
9	7059	97
10	7431	104

Factory set to position 10

DRAWN BY	CJF
CHECKED BY	CJF
FINISH COLOR	BLACK
KELVIN COLOR	3000K
REVISION	----
DATE	4/3/20

SSCO EST. 1914
Stevens Sales Company

CONTACT: CARSON FILLIN WITH STEVENS SALES COMPANY
CELL: 801-682-5893 EMAIL: CARSON@SSCO.NET
INSIDE SUPPORT: DANA ZAMORA. EMAIL: DANA@SSCO.NET

DWG #(S) R-121119-1S C12258A-DWG-02

DESC. CITY OF NORTH LOGAN - LP-1

SHEET 1/1

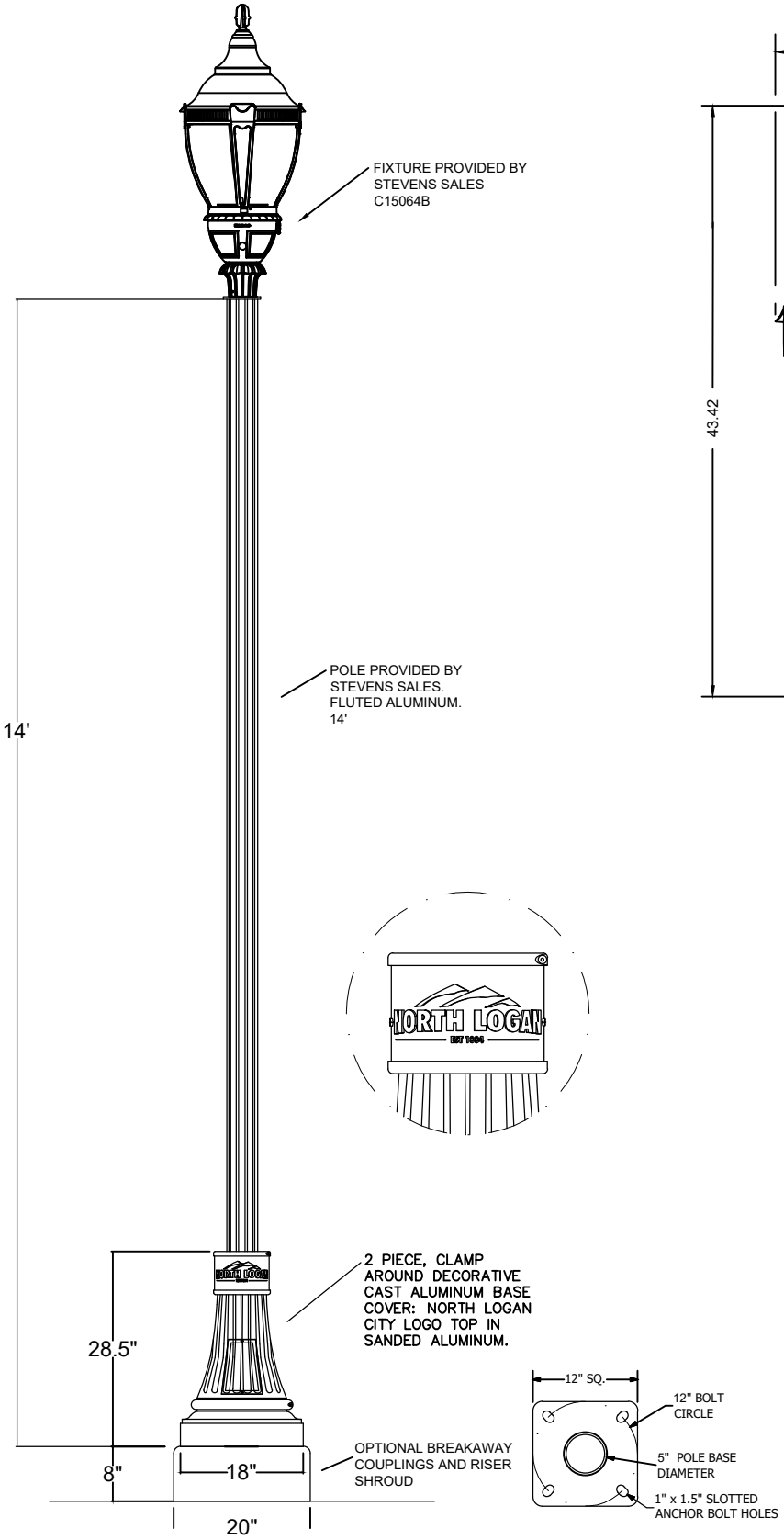

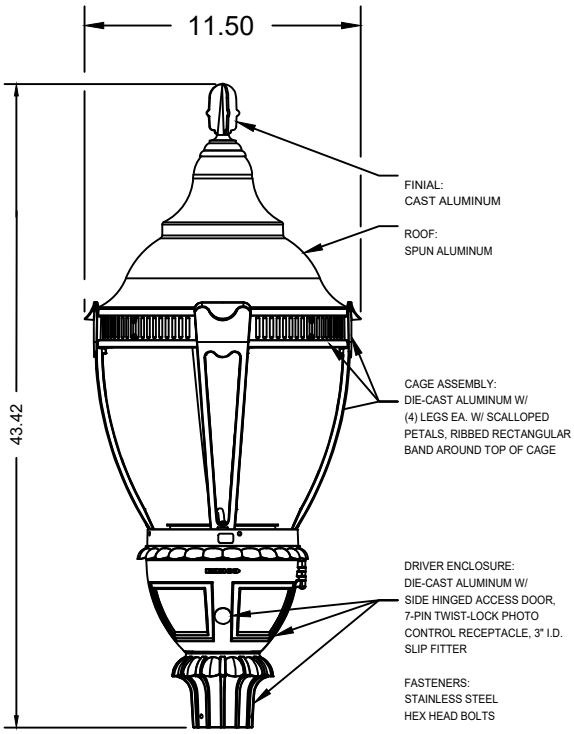

Comfort Optics Specifications:

- 140, 3000K (warm) LEDs, typical 75 Color Rendering Index (CRI), >100,000 hours of operational life (at 25°C ambient temperature & 70% lumen maintenance), Type 3 optics, IP66 rated optical system.
- Integral Advance Xitanium LED driver, class 1, IP66 rated, 2100mA, IntelliVolt 120-277 VAC, 50-60 Hz, RoHS compliant, 10kV/10kA surge suppression.
- Delivered lumens: 7316, Wattage: 94W.
- Field Adjustable Wattage Switch (FAWS).

Comfort Optics Certifications:

- UL8750 & UL1598 compliant, ETL/cETL listed to U.S. & Canadian safety standards for wet locations, manufactured to ISO 9001:2008 standards, LM79 & LM80 tested.

DRAWN BY	CJF
CHECKED BY	CJF
FINISH COLOR	BLACK
KELVIN COLOR	3000K
REVISION	----
DATE	4/3/20

SSCO EST. 1914
Stevens Sales Company

CONTACT: CARSON FILLIN WITH STEVENS SALES COMPANY
CELL: 801-682-5893 EMAIL: CARSON@SSCO.NET
INSIDE SUPPORT: DANA ZAMORA. EMAIL: DANA@SSCO.NET

DWG #(S) R-121119-2S C15064-DWG03

DESC. CITY OF NORTH LOGAN - LP-2

SHEET 1/1

NORTH LOGAN CITY
UTAH

Street Tree Manual

Standards of Practice

2076 North 1200 East • North Logan, UT 84341
www.ci.north-logan.ut.us

2008

Table of Contents

Chapter 1 — Purpose and Scope of the Street Tree Manual

The Street Tree Manual ("Manual") contains specific regulatory provisions, promulgated by the Urban Forester pursuant to North Logan Municipal Code that allows the Urban Forester to quickly implement best management practices, as reflected in the professional tree care industry, for the planting, maintenance, and removal of street trees.

The Manual supplements the North Logan Municipal Code (NLMC), Chapter 00.04, Street Trees. Therefore, individuals must be familiar with the requirements from both NLMC Chapter 00.04 and the Manual. NLMC Chapter 12.04 governs any conflict between NLMC Chapter 00.04 and the Manual.

Chapter 2 - Definitions.

"ANSI A300 standards" Industry developed standards of practice for tree care; acronym for American National Standards Institute

"ANSI Z133.1" safety standards for tree care operations

"Arboriculture" refers to that part of horticulture which deals with the study and care of trees and other woody plants.

"Backfill" soil put back into the hole when planting a tree

"Balled and burlapped (B & B)" having the root system and soil wrapped in burlap for moving and planting a tree or other plant

"Bare root" tree or other plant taken from the nursery with exposed root system, without soil

"Bottoming" excessive removal of the lower branches

"Bracing" installation of metal rods through weak sections or portions of a tree for added support

"Branch bark ridge" top area of a tree's crotch where the growth and development of the two adjoining limbs push the bark into a ridge

"Branch collar" area where a branch joins another branch or trunk created by overlapping wood tissues

"Cabling" installation of hardware in a tree to help support weak branches or crotches

"Caliper" trunk diameter measured at six inches from the ground; if caliper is greater than 4 inches the measurement is taken at 12 inches from the ground.

"Central leader" the main stem of a tree

"City" means the incorporated North Logan City.

"Co-dominant branches/stems" forked branches of nearly the same size in diameter and lacking a normal branch union (or containing a branch union with included bark).

"Crown" the aboveground portions of a tree.

"Crown cleaning" removal of water sprouts and dead, dying, diseased, crossing and high-risk branches from a tree.

"Crown raising" removal of the lower branches of a tree in order to provide clearance for buildings, vehicles and pedestrians.

"Crown reduction" pruning to reduce the height and/or spread of a tree by cutting to a lateral branch or limb at least one-half the diameter of the cut being made.

"Crown restoration" a method of restoring the natural growth habit of a tree that has been topped or damaged in any other way.

"Crown thinning" selective removal of laterals from branches and limbs to provide light and air movement through the crown or to lighten the weight of the remaining branches.

"Cultural" sunlight; water; fertilizer; air; pest infestations; or other factors resulting in poor tree growth.

"Deadwooding" removal of dead and dying limbs from a tree.

"Decay" decomposition of woody tissues by fungi or bacteria.

"Dieback" condition in which the ends of the branches are dying.

"Director" means the City's Parks and Recreation Director, or designee.

"Drip line" means that area on the ground below the tree in which the boundary is designated by the edge of the tree's branches.

"Drop-crotch pruning" see crown reduction

"Easement" means a grant of one or more property rights by the property owner, for a specific purpose, to the public, a corporation, or another person or entity.

"Emergency" means damage to utility systems, or to public or private property or an immediate threat to the welfare of persons, due to storm or other acts of God or other accident which requires immediate attention to alleviate the condition or commence or complete repairs.

"Heading back" topping; cutting of limbs back to buds, stubs or lateral branches not large enough to assume apical dominance.

"Hazard tree" means any tree or tree part that with a combination of

structural defect and/or disease which makes it subject to a high probability of failure, and a proximity to persons or property, as assessed by the Urban Forester. Hazard tree evaluation standards are established by the International Society of Arboriculture and are used by the City to determine this designation.

"Included bark" bark that becomes embedded in a crotch between branch and trunk or between co-dominant stems and causes a weak structure.

"Internode" the region of the stem between two successive nodes.

"Inappropriate Species" are the types and species of trees that are in the Street Tree Ordinance as prohibited trees or are determined as such by the Urban Forester.

"Knowingly" means that a person knows or acts with knowledge when he or she is aware of a fact, circumstance or result which is described by this Chapter as being a violation, whether or not the person is aware that the fact, circumstance or result is a violation of this Chapter.

"Leader" the primary terminal shoot or trunk of a tree.

"Lion tailing" the poor pruning practice in which the limbs are thinned from the inside of the crown to a clump of terminal foliage.

"Major pruning" means the pruning or cutting out of branches three inches in diameter or greater; root pruning; or cutting out of branches and limbs constituting greater than ten percent of the tree's foliage bearing area, and in which the natural form of the tree is retained.

"Mature Tree" when a tree has achieved 75% of its full canopy growth or trees that are over 15 years of age.

"Minor pruning" means pruning or cutting out of water sprouts, suckers, twigs, or branches less than three inches in diameter, or which constitutes less than ten percent of the tree's foliage bearing area and retains the natural form of the tree. Removal of dead wood, broken branches and stubs is also considered minor pruning.

"National arborist organization" means nationally recognized arborist associations including International Society of Arboriculture and American National Standards Institute.

"Node" the slightly enlarged portion of a stem where leaves and buds arise.

"Nuisance vegetation" means trees, plants, which are in the right-of--way or private property and situated so that they interfere with the free

and safe use of any street or sidewalk. Any vegetation which interferes with vision at any intersection so as to violate the Site Triangle section of the Code is also nuisance vegetation and a public nuisance.

"Occupational Safety and Health Act (OSHA)" the United States legislative act dealing with health and safety in the work place.

"Permit holder" means that person who is issued a street tree work permit under this Chapter.

"Person" includes any individual, firm, association, corporation, agency, or organization of any kind.

"Planting" means necessary steps taken during installation of trees to ensure survival.

"Planting strip" means that area from the back of curb and the front of sidewalk or the area in the raised median, used for grass or approved landscaping plants.

"Private tree" means a tree in which the trunk wholly resides on a property owner's real property.

"Property owner" means a person or agent thereof, who owns or controls real property adjacent and within a right-of-way.

"Pruning" cutting away unwanted parts of a plant.

"Public place" means property owned in fee by North Logan City.

"Public utility" means any organization that has a franchise to utilize the public rights-of-way.

"Raising (Elevating)" the removal of lower limbs from a tree to provide clearance.

"Reduction" pruning to decrease height and /or spread of a branch or crown.

"Removal" means the act of taking out or reducing a part or an entire tree or shrub so that the tree or shrub will not regain its mature size or function.

"Restoration" pruning to improve the structure, form and appearance of trees that have been severely headed, vandalized, topped or damaged.

"Right-of-way" means property designated for general public access, typically including but not limited to planting strip, street tree, sidewalk, curb, and street.

"Scaffold branches" the permanent or structural branches of a tree.

"Sidewalk" means a facility made of concrete or other approved material for the conveyance of pedestrians usually adjacent to a street, or between streets.

"Species" a group of organisms composed of individuals of the same genus.

"Staking" supporting a newly planted tree or leaning tree with stakes. "Stress" factors that negatively affect the growth and health of a tree.

"Structural defects" flaws, decay or other faults in the trunk, branches, or root collar or a tree that may lead to failure of the tree.

"Structural pruning" pruning to establish a strong scaffold branch system.

"Street" means a public way designed primarily for vehicular traffic. It includes the terms "road", "highway", "avenue", "boulevard", “lane”, "thoroughfare" or other traffic way and usually includes improvements, including curbs, sidewalks and street pavement within the right-of-way.

"Street tree" means any woody vegetation, generally single-stemmed, and is recognized by the City as a tree, and in which the trunk is wholly or partially located within the right-of-way or any easement granted for the purpose of public tree management. A "street tree" may also be the portions of a private tree residing in the right-of-way.

"Street Tree Manual" means the Tree Specifications and Standards of Practice for North Logan City which contains regulations and standards for the planting, pruning, removal and maintenance of trees on public right of way and a program for developing and improving the public tree resources of the community.

"Subordinate" pruning to reduce the size and growth of a branch in relation to other branches or leaders.

"Sucker" shoots arising from the roots.

"Supervise" means a person who has obtained certification from the International Society for Arboriculture and who ensures that his or her employees engage in work that is in reasonable compliance with standards contained in the Street Tree Manual.

"Thinning cut" removes a branch at its point of attachment.

"Topping" cutting back a tree to buds, stubs or laterals not large enough to assume the role of leader.

"Undercut" a cut on the underside of a limb to be removed to prevent tearing as the limb falls.

"Urban Forester" means the City's Urban Forester, or designee.

"Urban Forestry" has as its objective the cultivation and management of trees and related plants for their present and potential contribution to the physiological, sociological and economic well being of urban society. Inherent in this function is a comprehensive program designed to educate the urban populace on the role of trees and related plants in the urban environment. In its broadest sense, urban forestry is one essential component of a multi-managerial system that includes watersheds within the City, wildlife habitats, outdoor recreation opportunities, landscape design, recycling of municipal vegetative wastes and tree care in general.

Chapter 3 —Work Permits and Worker License

Any individual who seek to obtain a street tree work permit for planting, pruning or removal of any street tree or a street tree worker license may obtain an application at the following address:

Online: vvww.ci.north-logan.ut.us
Request by email: @ci.north-logan.ut.us
Request by phone: 1(435) 752-1310
Request in person: North Logan City Offices, 2076 North 1200 East

Chapter 4 - Tree Selection

A beautiful, well-maintained tree adds environmental, economic and social value to the community. Trees are critical to the urban infrastructure. They provide shade, energy conservation, road conservation, prevent erosion, mitigate damage from storm water, clean the air and water, help block wind, and provide habitat for urban wildlife.

Planting the right tree in the right place is an investment in the future. Choosing the right tree and the best place to plant will help provide beautiful, healthy trees that require less maintenance. The temptation to plant a fast growing tree is great. However, fast growing trees often develop problems prior to maturity because much of their energy is used in growth with little left over for defense of pests and diseases. Trees with slow to moderate growth rates are usually healthier, survive longer, and are able to tolerate attacks from pests and diseases. Good tree selection should also accommodate site use and safety needs.

A focus of the urban forestry program is to advocate for the establishment and retention of adequate planting spaces while considering the community desire for urban aesthetics. Large trees with overhanging canopies of branches are especially desirable. Streets with a cathedral of trees overhead provide many benefits; they provide a traffic calming effect, extend the life of roads, provide a separation between streets and sidewalks, reduce pollution, noise, erosion and wind, and cool our community.

Planting strips vary greatly in size. Street trees with large canopies require space to grow in order to provide benefits to the community. Wide planting strips are important, if we want large street trees to reach maturity without damaging sidewalks, curbs and streets. Street system design should provide sufficient space to accommodate large trees.

A. Appropriate Species. Appropriate Species (by planting strip width size). SEE APPENDIX A

1. Street Tree Selection List

2. Factors to consider when selecting the right tree for the right place include:

   a. Mature height, width and shape of the tree

b. Visibility and clearance near driveways, intersections, traffic signs and signals

c. Future conflicts with overhead (trees with height of more than 20' at maturity shall not be planted under, or adjacent to overhead utility lines) and underground utility lines (at least 5 feet from underground utility lines)

d. Soil space for roots to avoid conflicts with sidewalks, driveways, streets, curbs, sewer and septic systems

e. Soil type, soil conditions and other site constraints

f. Cultural requirements of the tree-hardiness, light, soil and water requirements

g. Susceptibility to disease or insect pests

B. Replacement Tree Size. Planting Strip for:

1. 4' planting strip- 1.5" or larger caliper.

2. 6-8' planting strip- 2" or larger caliper.

C. Replacement Tree Quality.

Replacement trees shall meet the quality and size standards of this chapter. Replacement trees shall be American Standard for Nursery Stock Grade No. 1 or better.

D. Prohibited Species.

(Common Name)	(Scientific Name)
Cottonwoods, Aspen	Populus sp.
Willows	Salix sp.
Silver Maple	Acer saccharinum
Tree of Heaven	Ailanthus altissima
Boxelder	Acer negundo
Black Locust	Robinia pseudoacacia

Chapter 5- Planting Standards

A. Objective. Street trees shall be planted to provide for the eventual mature size of the trees.

B. Equipment. All equipment to be used and all work to be performed must be in full compliance with the most current revision of the American National Standards Institute Standard Z-133.1 and A300 or as amended.

C. Planting locations. Trees shall not be planted closer than:

1. Twenty-five (25) feet from the curb line of an intersection; lower tree branches should be shortened or removed to provide physical and visual clearance.

2. Five (5) feet from driveways.

3. Five (5) feet from fire hydrants, underground utilities, water meters, and utility boxes or poles.

4. Ten (10) feet from directional traffic signs.

5. Two (2) feet from property lines.

6. Twenty (20) feet from stop or yield signs.

7. Twenty (20) feet from street lights. If a columnar variety is selected, the distance can be reduced, but species selection shall be determined by the Urban Forester.

8. Twenty-five (25) feet from adjacent trees depending on species.

9. 3 feet behind curb or sidewalk if no planter strip exists (attached sidewalks or just curb).

10. Trees with height of more than twenty-five (25) feet at maturity shall not be planted under, or adjacent to overhead utility lines

D. New Street Trees. New street trees shall not be less than 1.50 inches in diameter, measured at six inches above the ground. The Urban Forester shall authorize variances in size. Plant material shall conform with and meet American Standard for Nursery Stock, ANSI Z60.1-1996 or as amended and the Standardized Plant Names adopted by the American Joint Committee on Horticulture Nomenclature. Plant material may be balled and burlapped, containerized or bare root.

E. Handling standards. Street trees should be handled and planted according to the specifications contained in this subsection.

1. Transportation/ Storage and Handling of Plant Material. Individuals should take all precautions customary in good trade practice in preparing plants for moving, including, but not limited to the following:

   a. Dig, pack, transport, and handle plants with care to ensure protection against injury.

   b. Protect all plants from drying out.

   c. Plants, once removed from the holding medium, must be planted immediately.

   d. Plants shall not be bound with wire or rope at any time so as to damage the bark or break branches.

   e. Plants should be lifted and handled with suitable support of the soil ball to avoid damage.

   f. Cover plants transported on open vehicles with a protective covering to prevent wind burn.

2. Concrete cuts. Concrete cuts for tree planting shall be at least 4' x 6' or 6' x *9'* or larger depending on the space constraints and the mature size of the tree, to allow for air and water into the root area.

3. Adjacent surfaces. Space between the tree and the hard surface may be covered by a nonpermanent hard surface such as bricks on sand, paving blocks and cobblestones; and mulch.

4. Accessories and soil amendments.

   a. Bark mulch. Bark mulch, shredded medium grind size, free from noxious weed seed, debris, and all foreign material, may be applied at a three (3") inch depth in a four (4") foot diameter circle or to curb around tree. Mulch must stay two (2") to six (6") inches away from the trunk of the tree.

   b. Water. Water should be free of substances harmful to plant growth. Water polymers may be used to extend water holding capacity in dry sites.

   c. Organic matter. Native soil may be amended by spreading two (2") to four (4") inches of organic matter (bark, sawdust, compost) over the area to be planted. The organic matter should then be worked into the soil to a depth of six (6") or more inches. The deeper the organic matter is incorporated, the deeper will be root development especially in poor and compacted soils.

F. Planting Operations. Streets trees should be planted according to the following specifications (Fig. 1. New tree planting):

1. Work Area. During planting, areas being landscaped should be kept clean. Water, mud, dirt, trash, papers, cans, and other materials are to be kept off turf, walks, driveways and streets so as not to impede normal traffic or use of area and to prevent water from reaching storm drains. Cleaning should be performed during installation of the street trees and upon completion of the work. All excess materials, soil, debris and equipment should be removed from the site upon completion of work. Damage, if any, to adjacent areas must be repaired.

2. Excavation. Excavate the planting hole three (3) to five (5) times wider than the diameter of the root ball. If the soil is compacted, the hole should be five (5) times the width of the root ball. The hole must be wider at the top than at the bottom, with shallow, sloped

   walls. The planting hole should not be deeper than the root ball, and the bottom of the hole should be undisturbed soil so that the soil will give solid support to the bottom of the root ball. The top of the root collar should be level with the existing finish grade at the planting site. Plants should not be planted deeper than they were at their former location.

3. Plant Protection. Plants should be protected at all times during planting operations to prevent roots from drying out. No planting is to be done during freezing weather or other highly unfavorable planting conditions. The root system should be kept moist until planting. This is accomplished by soaking the roots in water for one (1) to two (2) hours, but for NO MORE THAN SIX (6) hours; by wrapping them in moist burlap; or by temporarily planting (heeling in) to planting depth in moist sawdust, bark or soil. Hold plants in the shade prior to planting.

4. Setting the plants in the hole. Before planting a bare root street tree, prune back any badly bruised, broken, girdling or jagged roots to sound wood with a clean cut. Dig the planting hole deep enough so the plant, when set in the hole, will be at the level it was in the nursery, or preferably, one (1") to two (2") inches higher a mound of soil at the center of the planting hole is used to achieve this. The hole large enough to accommodate the root system. The diameter of the hole should allow spreading the roots without crowding or bending them. If branches were tied in at the nursery they must be released prior to final orientation in the planting hole to achieve the best landscape affect.

   a. Special setting instructions for balled and burlapped trees: If a street tree is balled and burlapped prior to planting, one should comply with the following instructions:

      Setting the plants in the hole. A balled and burlapped plant should be positioned so that its weight keeps the tree in a perpendicular position before backfill is added. Plants should be transferred directly from the storage site to the planting hole. If branches were tied in at the nursery they must be released prior to final orientation in the planting hole to achieve the best landscape affect.

   b. Remove wire baskets. After the root ball is oriented in the hole, balled and burlapped trees in wire baskets shall have the upper two-thirds of the wire basket cut and removed from the ball.

   c. Remove burlap. After the root ball is in the hole, the burlap should be removed from the top and sides of the ball but not from beneath the ball. If removal of the burlap will result in the soil crumbling, the burlap should be rolled back only from the top and slit along the sides with a sharp knife. If natural burlap is not used, the burlap will have to be removed entirely at planting. All non-biodegradable twine or ropes tied around the trunk of the

tree or the root ball must be removed. Natural fiber ties, if tied around the trunk, shall be removed.

5. Backfill and Water. Backfill should be native topsoil, reasonably free of roots, rocks, subsoil, debris, large weeds, and foreign matter. The backfill should be worked around and beneath the ball so no air pockets remain. Firm the soil near the base of the root ball so that the tree is vertical and adequately supported, but do not pack the soil. The addition of soil alternating with tamping should continue until the hole is half full. Water is then added to partially fill the hole. After the water has soaked into the soil, backfill with soil should be completed and a water collection basin raked around the hole to facilitate watering later. Water is then added following final backfilling.

6. Basin construction. Construct around the perimeter of each root ball a shallow rain basin consisting of a ridge or berm of earth three (3") to four (4") inches high and slightly larger than the outside diameter of the root ball, so that water drains away from the trunk, but not away from the root system.

7. Mulching. Mulch tree planting pits and shrub beds with bark mulching material three (3") to six (6") inches deep immediately after planting. Keep the mulch at least two (2") inches away from the trunks to prevent trunk decay. Thoroughly water mulched areas. After watering, rake mulch to provide a uniform finished surface.

8. Initial pruning. The tree should be pruned to eliminate branches that are damaged, diseased, or that interfere with the natural structure in the tree. No healthy branch shall be removed unless one or more of the above criteria are met. Pruning cuts shall be made in compliance with International Society of Arboriculture pruning standards. No application of wound dressings shall occur.

G. Future Maintenance. The adjacent property owner shall assume the following maintenance responsibilities after the planting of a street tree.

1. Watering. The permit holder shall water thoroughly at the time of installation, as required, to maintain vigorous and healthy tree growth. The permit holder shall continue to water the tree during the next three summers. New trees should receive five (five) to ten (10) gallons of water per week for the first three summers to promote a deep root system. After the first three years, trees should be established and irrigation is no longer needed.

2. Staking. This treatment is not a standard treatment and should be used judiciously as in cases of damaged root balls, unless the tree cannot stand by itself or other conditions that have compromised the root balls. If stakes are used, they are to be loose such that they do not interfere with the free movement of the tree and should be 2/3 the height of the tree. Any stakes should be removed after the first growing season.

3. Tree wrap. This treatment is not a standard treatment and should be used with justifiable benefits (such as reduced rodent injury; mechanical injury; sunscald). Any tree wrap should be removed after the first growing season.

4. Mulching. Competing vegetation shall be controlled to the extent necessary to allow establishment, survival, and growth of the planted trees. To ensure that competing vegetation is properly controlled, trees are to have much, four (4) feet in diameter, three (3) to six (6) inches at the base of the tree, keeping the mulch at least two (2) inches away from the trunks to prevent decay.

Chapter 7 – Pruning

A. Pruning Specifications and Standards.

There are many erroneous terms used by the public in reference to the removal of tree parts. Shaping, trimming, shearing, tipping, topping, rounding over, hedging and flat topping are some of the terms used. These terms do not define pruning or the techniques used to prune plants. These terms represent removal of tree parts that often initiates decay or decline in trees. They are not biologically correct and do not enhance the health of the tree and often shorten the life of the tree.

Pruning is intentionally and permanently injuring a tree to meet a management objective in the landscape. It is a maintenance procedure that is performed to achieve a clear management objective. It is neither random nor performed because it is required every year. These guidelines are presented as working guidelines, recognizing that trees are individually unique in structure, form and growth response—not only between, but also within species and cultivars. The appropriate guidelines should be chosen and/or modified depending on species, age of the tree, time of the year, condition of the tree and the management objective.

B. Pruning Permit Process.

Any person (property owners or persons retained to perform the work) to perform work on street trees must first obtain a Street Tree Work Permit with in North Logan City. Permits are required by commercial licensed tree firms for pruning of any tree within the public right-of-way. The applicant must be a licensed, bonded, insured and ISA certified arborist to obtain a permit. Property owners may perform minor pruning without obtaining a permit. There is no fee for a permit to prune street trees. To request a site visit contact the North Logan City Offices. All work sites are subject to pre and post inspections of the work site and work procedures.

Pruning criteria

The Urban Forester may authorize, deny or order pruning of or may prune trees and shrubs situated within the rights-of-way whenever at least one of the following criteria is met.

1. Any tree(s) that because of habit of growth, age, condition or disease becomes a public nuisance or risk to public safety.
2. Any tree(s) that obstructs a clear view of streets, signs, signals, street lights, intersections or interferes with the safe use of the street or sidewalk.
3. Any tree(s) that does not meet an eight-foot clearance over sidewalks and a fourteen-foot clearance over streets.
4. Any tree(s) that is damaging public improvements or public utilities.

5. Any tree(s) on private property that overhangs the public right-of-way and interferes with established clearance and pruning criteria.

C. Pruning Specifications and Standards.

1. All equipment to be used and all pruning shall follow the American National Standard Institute Standard Z-133.1-200 and A300 and National Arborist Association Pruning Standards for Shade Trees or as amended.
2. For clearance pruning, remove branches to permit clearance of approximately eight (8) feet on the sidewalk or pedestrian side of tree and approximately fourteen (14) feet on roadside. No more than 25% of the live crown shall be removed at a time.
3. All final cuts shall be made sufficiently close to the trunk or parent limb, without cutting into the branch collar or leaving a protruding stub, so that closure can readily begin under normal conditions. For heavier limbs the three-cut procedure must be performed to prevent bark and trunk damage.
   It is necessary to use the three step cutting technique on branches

that are too heavy to handle to prevent splitting or peeling the bark (Fig.2. Proper Pruning Principles. Three-cut procedure). Where necessary, to prevent tree or property damage, branches shall be lowered to the ground by proper ropes or equipment.

4. Clean cuts shall be made at all times. Excessively deep flush cuts that produce large wounds or weaken the tree at the cut shall not be made. Sharp pruning tools shall be used so that clean cuts will be made at all times. All pruning tools and saws shall be kept sharpened to result in final cuts with smooth wood surface and secure bark remaining intact. All trees six inches or less in diameter shall be pruned with hand and/or hydraulic pruning tools only.
5. On trees known to be diseased, tools are to be disinfected with methyl alcohol at 70% (isopropyl alcohol diluted appropriately with water) or 10 % bleach solution after each cut and between trees where there is known to be a danger of transmitting the disease on tools.
6. Equipment that will damage the bark and cambium layer shall not be used on or in any tree.

7. Climbing spurs shall not be used when climbing trees, except to climb a tree to be removed or to perform an aerial rescue of an injured worker.
8. Ropes shall not come in direct contact with the crotch of the tree when tied into the tree. Friction or cambium savers are to be used when accessing and climbing the tree with rope and saddle. Rope injury from loading heavy limbs should be avoided.
9. Natural or mechanical rigging techniques shall be used to lower all limbs of sufficient size that may cause damage to other trees or surrounding public or private property.
10. Topping is not acceptable pruning practice. (Fig.3 Proper Pruning vs. Topping Trees)

D. Tree Pruning Specifications.

The word `shall' indicates a practice is mandatory. The word `should' refers to a practice that is highly recommended. Attention is to be given to develop and preserve tree structure, health and the final appearance of the trees. Appropriate pruning shall be done in order to maintain a tree form typical of the species (cultivar) of the tree being pruned.

1. <u>General Procedures</u>

   a. Live branches less than 1.5 inches or greater than 3 inches should not be removed.

   b. Dead branches greater than .5 inches measured at the base of the branch shall be removed from the canopy of all trees.

c. Remove no more than 20 percent of live foliage from any tree.

2. Procedures to Reduce High-risk Conditions in Trees and Improve Structure (Major Pruning)

a. Remove all dead, dying and diseased branches.

b. Reduce the weight of branches or stems with included bark.

c. Reduce the weight toward the ends of all but one co-dominant stem.

d. Thin the outer edge of the canopy. When laterals are thinned from a branch, at least one-half of the foliage on laterals along the inner two-thirds of the branch should be retained. Excessive removal of interior laterals leads to lion's tailing. (Fig. 8. Restoring a lions-tailed tree)

e. Remove lower branches to permit clearance of approximately eight feet on the sidewalk or pedestrian area and fourteen feet on the street side. In raising the bottom branches of trees for clearance, care should be given to the final appearance of the entire crown. The tree should have at least one-half of its foliage on branches that originate in the upper two-thirds of its crown to ensure a well-formed, tapered structure and to uniformly distribute stress within the tree. Excessive removal or `bottoming' of the tree is prohibited. (Fig. 4. Raising the canopy)

f. Remove all interior or interfering branches, and one of all crossed or rubbing branches where practical so the removal thereof will not leave large holes in the general form of the tree.

Excessive removal of interior branches as to cause a `lion's tailing effect is prohibited. (Fig. 8. Restoring a lions-tailed tree)

3. Specific Procedures for Mature Trees (Major Pruning).

a. Identify those trees that have included bark in the crotches between co-dominant stems. Make a note of these and report them to the Urban Forester. The Urban Forester or designee will evaluate these trees for possible cabling, pruning or other treatments. Identify limbs and trunks with vertical cracks or other potentially hazardous conditions. The presence of any structural problem, disease, insect pest or decay should be reported in writing to the Urban Forester.

b. The weight on main scaffold limbs with included bark shall be reduced by approximately one-third by removing some secondary branches toward the ends of the limbs and/or by removing the end of the branch using a reduction cut. (Fig. 5. Reduction Cut)

c. If a tree divides into two or more co-dominant leaders of about equal size in the bottom two-thirds of the tree, reduce the end weight by approximately one-third using reduction and thinning cuts on all stems but the one you believe could become the strongest and most dominant leader. To accomplish this, remove the main portion of the co-dominant leaders growing upright or toward the center and leave those that are oriented outward. Use mostly thinning cuts, not drop-crotch cuts, on larger branches and trees. (Note: On some trees, you may not be able to perform all of this because you can not remove more than 20 percent of the foliage. Make a note of this tree and report to the Urban Forester.)
d. If less than 20 percent of the live foliage was removed on a mature tree following procedures 1 and 2 above, thin the canopy to allow more light to reach the ground under the tree and to help reduce damage from storms. The foliage removed shall be taken from the outer edge of the canopy, not from the interior. Interior branches shall be left on the tree.
e. Crowns of trees that were storm damaged or topped shall be restored to improve structure and form. Remove or shorten all sprouts except one, which will become the dominant stem at that point. Thirty percent of the foliage may be removed when performing this work.

4. Specific Procedures for Young Trees (Minor Pruning)
The primary purpose of pruning young trees is to improve the trunk and branch structure. Properly trained young trees will develop into structurally strong mature trees. The greatest structural concern in young trees is the establishment of a central leader and the reduction

of co-dominant trunks or main leaders. Reducing one of the co-dominant branches is highly recommended if possible. If removal is required, it should be accomplished over several pruning cycles.
a. The subordination or removal of one side of a co-dominant leader or stem, due to the recognized potential risk associated with co-dominant leaders, is the primary objective. (Fig. 6. Maintaining a dominant leader) Branches, trunks or leaders not considered the main leader, two inches diameter or larger should be subordinated or removed. **The main leader shall not be subordinated or removed.** Co-dominant leaders are considered to be two or more branches, trunks or leaders of approximately the same size, originating in proximity to one another. If there is no stem considerably larger than others, subordinate all but one stem. Where there is included bark as part of the condition, preference should be given to the removal of one side, but only if such removal will not remove more than twenty percent of the canopy or destroy the aesthetic value of the canopy.

b. Some branches on young trees are considered temporary branches. These are branches that may be removed over time depending on the species, site use and management objectives. Temporary branches should remain on the tree as long as possible if they are not a structural problem. Selective removal should occur over several pruning cycles and no more than twenty percent of the live crown shall be removed in any one pruning cycle.

c. Canopy raising should shorten branches over paved areas with a reduction cut back to a living side branch at least one-third the diameter of the removed portion to allow approximately eight feet of clearance for pedestrians and vehicles. Removal of the branch may be necessary, but preference shall be given to shortening of branches instead of removing, especially if the branch diameter is more than half the trunk diameter.
When pruning is completed, approximately one-half of the live crown should originate from branches on the lower two-thirds of the tree. (Fig. 4. Raising the canopy)

d. Crown cleaning is the removal of dead, dying diseased, damaged, crowded, broken, weakly attached, low vigor branches, out-of-place branches and perhaps some water sprouts from a tree crown. Crown cleaning is not stripping out the interior canopy leaving only live foliage at the end of the branches. It will not be necessary to make cuts smaller than one inch in diameter, other than where branches may be shortened to accommodate clearance beneath the canopy. Canopy cleaning includes the following:

1) If two limbs are crossing or touch each other, shorten or remove one of them so they no longer cross or touch.

2) If two limbs originate within twelve inches of each other on the trunk, shorten or remove one of them.

3) Remove dead or broken limbs one-half inch in diameter or larger.

4) Directional prune to establish a minimum of three feet or as practical of clearance from buildings, lights and other structures.

5. <u>Restoration Pruning (Major Pruning)</u>
Crown restoration is intended to improve the structure of trees that have been broken, topped or severely pruned using heading cuts. Many sprouts form from the cut ends of topped or broken trees. Some sprouts also develop below the cuts. They are poorly attached to the tree and can break easily. Crown restoration may require several pruning cycles over a number of years. (Fig.7. Crown restoration of a topped tree)

a. Objective - The objective is to develop one sprout into the main stem and one as a branch no more than about half the diameter of the stem. The size range of parts to be removed, the location in the canopy and the percentage of sprouts to be removed will vary

depending on the severity of the damage and the health and vigor of the tree.

b. Specific Procedures - One to four sprouts, on the main branch stubs, should be selected to form a natural appearing crown. The more vigorous sprouts may need to be thinned, cut to a lateral, or even headed, to control growth. Begin by removing some sprouts completely and shortening others using reduction cuts. Removing too many sprouts at one time can stress the tree and cause additional sprouting. This leaves one sprout to become the main stem and several to remain as branches. One sprout of moderate vigor is left to become the main stem. The remaining sprouts will be shortened again in the next few years.

Chapter 8 - Removal Standards

A. Street Tree Removal Specifications and Standards.

1. The tree removal shall consist of cutting down each tree in a safe manner to a point four inches above the adjacent ground level. The permit holder shall remove all tree limbs and tree trunks from the site in accordance with regulations of the City, County and State. If requested, logs and chips are to be left on private property.
2. The permit holder shall refrain from the practice of directional felling the trees. All trees shall be limbed out prior to the final cutting of the trunk. Sidewalks, curbs, streets and manhole structures shall always be protected from the impact of falling wood by use of the tree or limb ground supports. Ropes or other mechanical devices shall be used to lower all limbs of sufficient size that may cause damage to other trees or surrounding public or private property.
3. Limbs and trunks temporarily placed in the right of way shall be placed in such a manner as to eliminate any obstruction to motor vehicles and pedestrians. Brush and limbs overhanging a curb or pavement shall not be acceptable and under no circumstances shall these materials be allowed to lie in the right of way overnight.
4. All infectious diseased or parts of dead trees possibly harboring vectors of infectious diseases shall be removed from North Logan City and shall become the permit holder responsibility to ensure destruction of the diseased or dead wood in accordance with the

State statues and local ordinances. Under no circumstances shall logs from infectious diseased trees be left on site.

B. Street Tree Removal Criteria.

Street tree removal permit will be granted when the adjacent property owner has sufficiently demonstrated that the continuing presence of the tree outweighs the public benefit provided by the tree. Trees that are determined to be dead, "hazards" or "inappropriate species" as designated by the City are automatic candidates for removal.
The following factors **shall not** be considered as criteria for removal of a street tree:

1. Obstruction of view
2. Potential future costs to public infrastructure or private property which can be avoided by root pruning and root barriers
3. The cost of routine tree maintenance (pruning, watering, fertilizing, spraying, if necessary)
4. Normal maintenance activities such as the raking of leaves and flowers and annual cleaning of gutters
5. Hazards that can be controlled or eliminated through appropriate pruning or maintenance

C. Procedure for Removal of Trees and Shrubs in Right-of-Way.

The adjacent property owner shall provide the following information in letter form:

1. Property address
2. Number of trees in question, size of tree (diameter at 4.5 ft from ground), species (if known) and description of how the tree fits the criteria for removal.
3. A tree planting scheme for replacements (what, where and when). The minimum size of a replacement tree is 2" in caliper unless approved by the Urban Forester. Suggestions on species and location are available from the Urban Forester and can be determined at time of inspection.

4. The removal request shall be in the form of a letter to the City and sent to:

   North Logan City Urban Forester
   2076 North 1200 East
   North Logan, Utah 84341
   1(435) 752-1310 ext. ??
   urbanforestry@ci.north-logan.ut.us

Upon approval of the removal, the applicant shall obtain the street tree removal permit at the North Logan Offices, 2076 North 1200 East for a fee of $00 (per address, per request). The permit is valid for 90 days and the applicant should notify Urban Forestry upon completion of work.

D. Stump Grinding Specifications.

1. The stumps and roots of trees or shrubs shall be removed to a point at least one foot below the top of the adjacent curb or proposed curb grade, treating the remaining roots with a suitable compound to prevent future sprouting or growth. All areas where stumps have been removed, and areas disturbed by the removal operations, shall be backfilled to the same level of adjoining grade with pulverized topsoil and seeded the same day. Grindings are to be removed immediately, otherwise the site shall be properly barricades overnight to ensure the safety of the public. Any roots which have disrupted or broken the adjacent street, curb or sidewalk shall be removed and said street, sidewalk, or curb shall be repaired at the expense of the permit holder.
2. Removal of stump grindings and debris shall be within twenty-four hours after grinding (removal) of a tree stump and buttress roots and the permit holder shall remove all stump grindings and associated debris from the site. Grinding debris generated by stump removal work shall be the responsibility of the permit holder. Stumps, grindings and debris shall be placed away from the curb and gutter, street and sidewalk immediately to eliminate hazards to the motoring public and pedestrians and to eliminate damage to public property.
3. All areas where stumps have been removed and areas disturbed by the removal operations shall be backfilled to the level of adjoining grade with pulverized topsoil the same day grindings are removed, otherwise the site shall be properly barricaded overnight to ensure the safety of the public. All holes must be filled with topsoil by the second day. The permit holders shall supply their own topsoil. The topsoil shall be properly leveled and compacted so as to ensure a minimum amount of settlement of the backfill material. If there is more than a one-day delay between the time of removal of grindings and refilling with soil, the disturbed areas shall be barricaded off for public safety and the Urban Forester notified. Stump grindings and debris shall not be used as backfill material. Topsoil: native; free of roots, rocks, subsoil, debris, large weeds, and foreign matter; acidity range (pH) of 6.5 to 7.0.
4. All adjacent disturbed areas and areas where backfill material was installed shall be completely restored to approved landscaping.

Chapter 9 — Safety Standards

A. Compliance With Current Revision of the American National Standards Institute Standard.

1. All equipment to be used and all work to be performed must be in full compliance with the most current revision of the American National Standards Institute Standard Z133.1-2000 (or as amended) and the Occupational Safety and Hazard Administration's Landscape and Horticultural Services Standards.
2. The Person shall provide personal protective equipment (head, face, eye, respiratory, clothing, footwear and chain saw-resistant leg protection) where there is reasonable probability of injury or illness that can be prevented.

Chapter 10 - Traffic Control

All work that may have impact on traffic operations and pedestrian, bike, or vehicle movement on public right of way should prepare and submit Traffic Control Plans to the North Logan City, Street Department for review before work begins.

Chapter 11 - Damage to Property

The permit holder shall take all necessary precautions to eliminate damage to adjacent trees and shrubs, lawns, curbs, walks or other real or personal property. Ropes or other mechanical devices shall be used to lower all limbs of sufficient size that may cause damage

to other trees or surrounding public or private property. Any damage to property, as the result of the permit holder's operations shall be the responsibility of the permit holder. Should the damage not be rectified within the time agreed upon or to the satisfaction of the Urban Forester or representative, the City reserves the right to repair or replace that which was damaged caused by the permit holder.

The permit holder shall inform the Urban Forester of representative of any damage caused by the permit holder's operation on the day such damage occurs.

Chapter 12 - Protection of Utilities

Pruning, planting and removal operations may be conducted in areas where overhead electric, telephone, and cable television facilities exist as well as underground water, sewer, telephone, cable, and gas utilities. For the underground utilities, the permit holder must ensure that all lines are located prior to any digging or stump removal (call before you dig (800) 662-4111). The permit holder shall protect utilities from damage, shall immediately contact the appropriate utility if damage should occur, and shall be responsible for all claims for damage due to this operation. The permit holder shall make arrangements with the overhead utility for removal of all necessary limbs and branches, which may conflict with or create a hazard in conducting the operations of the permit. If the permit holder has properly contacted the utility in sufficient time to arrange for the required work by the utility, delays encountered by the permit holder in waiting for the utility to complete its work shall not be the responsibility of the permit holder.

Chapter 13 - Site Clean Up

A. Clean Up the Site and Remove Debris

1. The permit holder shall clean up the site and remove debris immediately upon completion of the project. Site cleanup shall include removal of sawdust, small twigs, chips, leaves, trunks and limbs from the street, curb, parkway, sidewalk, private lawns and driveways with appropriate tools for the job. The permit holder is responsible for the proper disposal of all debris from the job site. The site shall be returned to the same state it existed in prior to the removal.

2. Disposal of all logs, limbs, chips and debris generated by work shall be the responsibility of the permit holder. The permit holder shall remove

all tree limbs and tree debris from the site and dispose of these limbs and debris in accordance with applicable ordinances and regulations of City, County and State. If residents request logs, these shall be left on private property and not in the right of way. If residents request chips, these too will be left on private property.

3. Limbs and trunks temporarily placed in the right of way shall be placed in such a manner as to eliminate any obstruction to motor vehicles and pedestrians. Brush and limbs overhanging a curb or pavement shall not be acceptable and under no circumstances shall these materials be allowed to lay on the right of way overnight.
4. All infectious diseased trees or parts of dead trees possibly harboring vectors of infectious diseases shall be removed and it shall become the permit holder's responsibility to ensure destruction of the diseased or dead wood in accordance with the State statutes and local ordinances. Under NO circumstances shall logs from infectious diseased trees be left for homeowners. An example of an infectious disease is Dutch elm disease. Asian long-horned beetle is an example of an insect pest.

Chapter 14 - Other Maintenance Specifications and Standards

A. FertilizationTree.

Fertilization shall be done in accordance with ANSI 300 (Part 2)-1998 standards and specifications.

B. Pesticide Applications.

Pesticide Applications (herbicides, insecticides, fungicides, poisons...) This refers to the use of any pesticide regardless of its purpose. Pesticides should not be applied where there is a chance of polluting waterways such as lakes, creeks, rivers or catch basins. Always follow the MSDS and product label for application, storage, and disposal of pesticides.

C. Staking, Cabling and Bracing.

The installation of cabling and bracing tree support systems is a specialized practice in the field of arboriculture. Proper training and field experience are necessary to perform these treatments successfully and without damaging the tree. These treatments shall be done in accordance with ANSI 300 (Part 3)-2000 standards and specifications.

D. Irrigation.

New trees should receive 5-10 gallons of water per week for the first three summers to promote a deep root system. After the first three years, trees should be established and irrigation should be stopped. Continued irritation would promote lateral surface roots that could potentially damage infrastructure.

Chapter 15 - City Maintenance List (Trees)

A. Street Trees.

The principles set forth in the Street Tree Manual shall be applied to all street trees in North Logan City. The City Maintenance list includes:

1. Maintain all street trees adjacent to City owned properties.
2. Maintain all street trees within publicly owned medians or curb to curb.
3. Maintain all street trees along major arterials where there is not an adjacent property owner.

Chapter 16 - Tree Preservation During Construction and Development

Prior to initiating tree removal on the site, vegetated areas and individual trees to be preserved shall be protected from potentially damaging activities pursuant to the following standards:

A. Placing Materials Near Trees.

No person may conduct any activity within the protected area of any tree designated to remain, including, but not limited to, parking equipment, placing solvents, storing building material and soil deposits, dumping concrete washout and locating burn holes.

B. Attachments to Trees.

During construction, no person shall attach any object to any tree designated for protection.

C. Protective Barrier.

Before development, land clearing, filling or any land alteration for which a Permit is required, the applicant:

1. Shall erect and maintain readily visible protective tree fencing along the outer edge of the dripline and completely surrounding the protected area of all protected trees or groups of trees. Fences shall be constructed of chain link and at least four feet high, unless other type of fencing is authorized by the Urban Forester.
2. Shall prohibit excavation or compaction of earth or other potentially damaging activities within the barriers.
3. Shall maintain the protective barriers in place until the Urban Forester authorizes their removal or a final certificate of occupancy is issued, whichever occurs first
4. Shall ensure that any landscaping done in the protected zone subsequent to the removal of the barriers shall be accomplished with light machinery or hand labor.
5. In addition to the above, the Urban Forester may require the following:
   a. Cover with mulch to a depth of at least six (6) inches or with plywood or similar material the areas adjoining the critical root zone of a tree in order to protect roots from damage caused by heavy equipment.
   b. Minimize root damage by excavating a two (2) foot deep trench, at edge of critical root zone, to cleanly sever the roots of trees to be retained.
   c. Have corrective pruning performed on protected trees in order to avoid damage from machinery or building activity.
   d. Maintain trees throughout construction period by watering and fertilizing if necessary.

D. Grade.

1. The grade shall not be elevated or reduced within the critical root zone of trees to be preserved without the Urban Forester's authorization. The Urban Forester may allow coverage of up to one half of the area of the tree's critical root zone with light soils (no clay) to the minimum depth necessary to carry out grading or landscaping plans, if it will not imperil the survival of the tree. Aeration devices may be required to ensure the tree's survival.
2. If the grade adjacent to a preserved tree is raised such that it could slough or erode into the tree's critical root zone, it shall be permanently stabilized to prevent suffocation of the roots.
3. The applicant shall not install an impervious surface within the critical root zone of any tree to be retained without the authorization of the Urban Forester. The Urban Forester may require specific construction methods and/or use of aeration devices to ensure the tree's survival and to minimize the potential for root induced damage to the impervious surface.

4. To the greatest extent practical, utility trenches shall be located outside of the critical root zone of trees to be retained. The Urban Forester may require that utilities be tunneled under the roots of trees to be retained if the Urban Forester determines that trenching would significantly reduce the chances of the tree's survival.
5. Trees and other vegetation to be retained shall be protected from erosion and sedimentation. Clearing operations shall be conducted so as to expose the smallest practical area of soil to erosion for the least possible time. To control erosion, shrubs, ground cover and stumps shall be maintained on the individual lots, where feasible. Where not feasible appropriate erosion control practices shall be implemented pursuant to NLMC Chapter 00.24 and 00.25.

D. Additional Requirements.

The Urban Forester may require additional tree protection measures, which are consistent with accepted urban forestry practices.

Appendix A

Street Tree Selection List

North Logan City
Street Tree Selection

Minimum 4' Planting Strip Width

Call (435) 752-1310 for site inspection before planting a street tree

Common Name	Scientific Name	Cuttivar	Height (in FT)	Width (in FT)	Shape	Features/Considerations	Drought Tolerant	Overhead Utilities OK	Soil Type
Hedge Maple	*Acer campestre*	Queen Elizabeth	30	30	rounded	low maintenance; yellow in fall	*v*	*v*	all
Crimson Sentry Maple	*Acer platanoides*	Crimson Sentry	25	15	oval	purple leaves; maroon in fall	v	v	all
Tartarian Maple	*Acer tartaricum*		25	20	small rounded	yellow/red in fall	v	v	all
Spring Flurry Serviceberry	*Amelanchierlaevis*	JFS-Arb	35	20	Upright oval	white flowers, edible fruit; strong leader	v		all
Autumn Brilliance Serviceberry	*Amelanchier x grandiflora*	Autumn Brilliance	20	15	upright, spreading	white flowers, edible fruit; red in fall		v	all
Princess Diana Serviceberry	*Amelanchierx grandiflora*	Princess Diana	25	15	gracefully	white flowers, edible fruit		v	all
Eastern Redbud	*Cercis canadensis*		25	35	horizontal	purple-pink flowers; yellow in fall		v	all
Flowering Dogwood	*Comus florida*	Varieties	20	20	upright spreading	disease resistant; white flowers		v	all
Thornless Cockspur Hawthorn	*Crataegus crus-galli*	Inermis	25	25	rounded	no thorns; orange tall color	*v*		all
Black Hawthorn	*Crataegus douglasii*		20	15	oval	native/wildlife, shade tolerant	*v*		all
Crimson Cloud Hawthorn	*Crataegus laevigata*	Crimson Cloud	25	18	shrubby/round	red flowers; fruit with star shape in center	*v*	v	all
Washington Hawthorn	*Crataegus phaenopyrum*		25	20	oval/rounded	white flowers; red fruit; orange/red in fat	v	v	all
Lavelle Hawthorn	*Crataegus x 1ava11ei*		28	20	irregularlvase	white flowers; orange fruit	*v*	*v*	all
Golden Desert Ash	*Fraxinus excelsior*	Aureafolia	20	20	rounded	golden twigs	*v*	v	all
Leprechaun Ash	*Fraxinus pennsylvanica*	Johnson	18	16	lollypop	purple flowers; fast grower; yellow in fat	*v*	-'	all
Goldenrain Tree	*Koelreuteria paniculata*		30	30	rounded	yellow floral clusters; summer flowering	v		all
Amur Maackia	*Maackia amurensis*		25	20	vase	white flower clusters	v		all
Butterflies Magnolia	*Magnolia acuminate x*	Butterflies	20	20	upright/pyramidal	showy yellow flowers		v	drained
Merrill Magnolia	*Magnolia x loebneri*	Merrill	25	25	ovallrounded	white/pink flowers at early age			all
Golden Raindrops	*Maus spp.*	Golden Raindrops	20	15	vase	deep cut leaves; golden fruit	*v*		all
Prairiefire Crabapple	*Malus spp.*	Prairiefire	20	20	upright/rounded	disease resistant; pink flowers; red foliage	v		all
Robinson Crabapple	*Maus spp.*	Robinson	25	25	upright rounded	fast growing; pink flowers; red fruit	*r*	v	all
Sugar Tyme Crabapple	*Malus spp.*	Sulyzam	18	15	oval	pink buds; white flower	v	v	all
Zumi Calocarpa Crabapple	*Malus x zumi*	Calocarpa	20	25	Round/spreading	disease resistant; white flowers; red fruit	*v*	*v*	all
Tschonoskii Crabapple	*Malus tschonoskii*		28	14	narrowly oval	white flowers; greenish fruit	v	e	all
American Hophornbeam	*Ostrya virginiana*		35	25	upright oval	hop-like fruit; yellow in fall	v		all
Thundercloud Plum	*Prunus cerasifera*	Thundercloud	20	20	upright/rounded	light pink flowers; purple leaves	*v*	*v*	all
European Bird Cherry	*Prunus padus*		30	25	round	white flowers; purple leaves		v	all
Canada Red Chokecherry	*Prunus virginiana*	Canada Red	25	22	rounded	unusual bark; purple leaves; red in fall			all
Cascade Snow Cherry	*Prunus*	Berry	25	20	upright spreading	disease resistant; white flowers		v	all
Snow Goose Cherry	*Prunus*	Snow Goose	20	20	upright/wide	disease resistant; white flowers; widens w/age		v	all
Capital Pear	*Pyrus callervana*	Capital	35	12	columnar	white flowers; red in fall	v		all
Chanticleer Pear	*Pyrus callervana*	Chanticleer	40	15	pyramidal	white flowers; red in fall	v		all
Redspire Pear	*Pyrus callervana*	Redspire	35	25	pyramidal	white flowers; red in fall	v		all
Cascara	*Rhamnus purshiana*		25	28	oval	native/wildlife; shade tolerant; yellow-purple		v	all
Ivory Silk Japanese Tree Lilac	*Syringe reticulate*	Ivory Silk	20	15	upright/rounded	creamy panicles; heavy flowering		v	drained

North Logan City
Street Tree Selection

Minimum 6' Planting Strip Width
*Refer to 4' tree list for additional trees for use under power lines

Call (435) 752-1310 for a site inspection before planting a street tree.

Common Name	**Scientific Name**	Cultivar	Height (in FT)	Width (in FT)	Shape	Features/Considerations	Drought Tolerant	Overhead Utilities OK*	Soil Type
Columnar Norway Maple	*Acer platanoides*	Columnar	35	15	narrow	column of green foliage; yellow in fall	v		all
Armstrong Maple	*Acer rubrum*	Armstrong	45	15	narrow	fast growing; yellow-orange in fall			all
Bowhall Maple	*Acer rubrum*	Bowhall	40	15	narrow	great fall color			all
October Glory Maple	*Acer rubrum*	October Glory	40	35	broadly oval	outstanding fall color; bright red	v		all
Green Mountain Maple	*Acer saccharum*	Green Mountain	45	35	broadly oval	heat tolerant; reddish-orange fall color	v		all
Pacific Sunset Maple	*Acer truncatum x platanoides*	Warrenred	30	25	oval	orange/red in fall			drained
Red Horse Chestnut	*Aesculus x cornea*	Briotti	30	35	rounded	long rosy cluster; small variety ; spiky nuts	v		all
American Hornbeam	*Carpinus caroliniana*		25	20	oval	smooth gray trunk; yellow to orange in fall		v	all
Japanese Hornbeam	*Carpinus japonicus*		30	25	rounded vase	white/yellow flowers; red in fall	v		all
Hackberry	*Celtic occidentalis*		45	35	broadly arching	very urban tolerant; rarely lifts sidewalks	v		all
Katsura Tree	*Cercidiphyllum japonicum*		40	40	pyramidal/rounded	heart shaped leaves; red-orange in fall			all
Yellowwood	*Cladrastis kentukea*		30	40	round	fragrant summer flowers; yellow in fall	v		all
Dawyck Purple Beech	*Fagus sylvatica*	Dawyck Purple	40	12	columnar	purple leaves			all
Autumn Applause Ash	*Fraxinus americana*	Autumn Applause	40	25	oval	maroon fall color; colors early			all
Marshall Ash	*Fraxinus pennsylvanica*	Marshall	50	40	broadly oval	toughladaptable; yellow in fall	v		all
Summit Ash	*Fraxinus pennsylvanica*	Summit	45	25	narrowly oval	yellow in fall	v		all
Autumn Gold Ginkgo	*Ginkgo biloba*	Autumn Gold	35	30	columnar	seedless male; yellow in fall	v		all
Princeton Sentry Ginkgo	*Ginkgo biloba*	Princeton Sentry	40	15	columnar	seedless male; yellow in fall	v		all
Skyline Honeylocust	*Gleditsia triacanthos*	Skycole	45	35	broadly pyramidal	tolerant of pollution; golden in fall	v		all
Shademaster Honeylocust	*Gleditsia triacanthos*	Shademaster	45	35	vase	upright branching; yellow in fall	v		all
Sour Gum / Black Tupelo	*Nyssa sylvatica*		35	20	pyramidal	red yellow in fall			all
European Hophornbeam	*Ostrya carpinifolia*		40	25	rounded	nutlets in hop-like bunches	v		all
Macho Cork Tree	*Phellodendron* amurense	Macho	40	30	vase shaped	seedless; yellow in fall			all
Shubert Cherry	*Prunus virginiana 'Shubert'*	Shubert	30	30	upright	delicate pink flowers; yellow in fall		v	all
Aristocrat Pear	*Pyres calleryana*	Aristocrat	40	28	pyramidal	open formal appearance; red fall			all
Chanticleer Pear	*Pyres calleryana*	Chanticleer	40	15	pyramidal	white flowers; red in fall	v		all
Japanese Pagodatree	*Sophora japonica*	Regent	50	45	rounded/upright	creamy white flowers in clusters	v		drained
Crimean Linden	*Tilia x euchlora*		40	35	broadly pyramidal	glossy foliage; yellow in fall	v		all
Legend Linden	*Tilia americana*	DTR 123	40	30	broadly pyramidal	strong central leader; glossy leaves	v		all
Greenspire Linden	*Tilia cordate*	Greenspire	40	30	pyramidal	strong/uniform; yellow in fall	v		all
Sterling Silver Linden	*Tilia fomentosa*	Sterling	45	35	pyramidal	dark green/silver underside; fewer aphids	v		all
Wireless Zelkova	*Zelkova serrata*	Schmidtlow	25	35	spreading vase	ideal for use under power lines	*v*	*v*	all
Village Green Zelkova	*Zelkova serrata*	Village Green	40	38	vase shaped	clean appearance; red in fall			all
Frontier Elm	*Ulmus*	Frontier	40	30	arching vase	disease resistant; fast grower; reddish-purple in	v		all
Prospector Elm	*U/mus wilsoniana*	Prospector	40	30	vase shaped	disease resistant; urban tolerant: yellow in fall	v		all

North Logan City
Street Tree Selection

Minimum 8' Planting Strip Width
*Refer to 4' tree list for additional trees for use under power lines

Call (435) 752-1310 for a site inspection before planting a street tree.

Common Name	**Scientific Name**	Cultivar	Height (in FT)	Width (in FT)	Shape	Features/Considerations	Drought Tolerant	Overhead Utilities O K*	Soil Type
Autumn Blaze Maple	*Acer x freemani*	Jeffersred	50	40	broadly oval	fast growing; brilliant long-lasting fall color	v		all
Crimson King Maple	*Acer platanoides*	Crimson King	40	35	oval/rounded	purple leaves; reddish bronze in fall			all
Deborah Maple	*Acer platanoides*	Deborah	45	40	oval/rounded	dark bronze green leaves; bronze in fall			all
Emerald Queen Maple	*Acer platanoides*	Emerald Queen	50	40	oval/upright	tolerant of pollution			all
Summershade Maple	Acer *platanoides*	Summershade	42	40	broad/rounded	fast growing; yellow in fall			all
Spaethii Maple	*Acer pseudoplatanus*	Atropurpureum	40	30	ovalluprigh t	green/purple leaves			all
Red Sunset Maple	*Acer rubrum*	Franksred	45	35	upright/oval	vigorous/symmetrical; orange/red in fall	v		all
Schlesinger Maple	*Acer rubrum*	Schlesingeri	45	35	vase shaped	orange/red in fall	v		all
Bonfire Maple	*Acer saccharum*	Bonfire	50	40	broadly oval	fast growing; orange-red in fall	v		all
Legacy Maple	*Acer saccharum*	Legacy	50	35	oval	glossy leaves; orange-red in fall	v		all
River Birch	*Betula nigra*		40	35	pyramidal/rounded	yellow in fall			all
American Beech	*Fagus americans*		50	40	broadly oval	slow growing; striking grey bark	v		all
European Beech	*Fagus sylvatica*		50	35	slightly rounded	leaves persistent through winter; striking bark			drained
Rivers Purple Beech	*Fagus sylvatica*	Riversii	50	40	broadly oval	deep purple foliage; striking grey bark			drained
Marshall Seedless Ash	*Fraxinus pennsylvanica*	Marsall	50	40	upright oval	native tree; drought and flood tolerant	v		all
Kentucky Coffeetree	*Gymnocladus dioicius*		65	50	ovate	bluish green leaflets; yellow in fall	v		all
Tulip Tree	*Liriodendron tulipifera*		60	30	oval	yellow flowers; yellow in fall			all
Bloodgood London Planetree	*Platanus x acerifolia*	Bloodgood	50	40	broadly pyramidal	exfoliating bark; somewhat disease resistant	v		all
Swamp White Oak	*Quercus bicolor*		45	45	rounded	adapted to wet soils	v		drained
Scarlet Oak	*Quercus coccinea*		50	40	upright/oval	red in fall	v		all
Pin Oak	*Quercus palusfris*		55	40	pyramidal	strong leader; retains leaves in winter; orange/red in fall	v		drained
Red Oak	*Quercus rubra*		50	45	rounded	fast growing/large; red in fall			drained
Accolade Elm	*U/mus*	Morton	70	60	arching vase	disease resistant; fast grower; graceful arching habit	v		all
Homestead Elm	*U/mus*	Homestead	50	35	arching vase	tolerant to urban conditions; fast grower; yellow in fall			all
Pioneer Elm	*Ulmus*	Pioneer	50	50	rounded	disease resistant; vigorous grower	v		all
Triumph Elm	*Ulmus*	Morton Glossy	55	45	upright oval/vase	disease resistant; glossy green foliage	v		all
Green Vase Zelkova	*Zelkova serrafa*	Green Vase	50	40	vase shaped	clean appearance; red in fall			all

APPENDIX B

Tree Care Diagrams

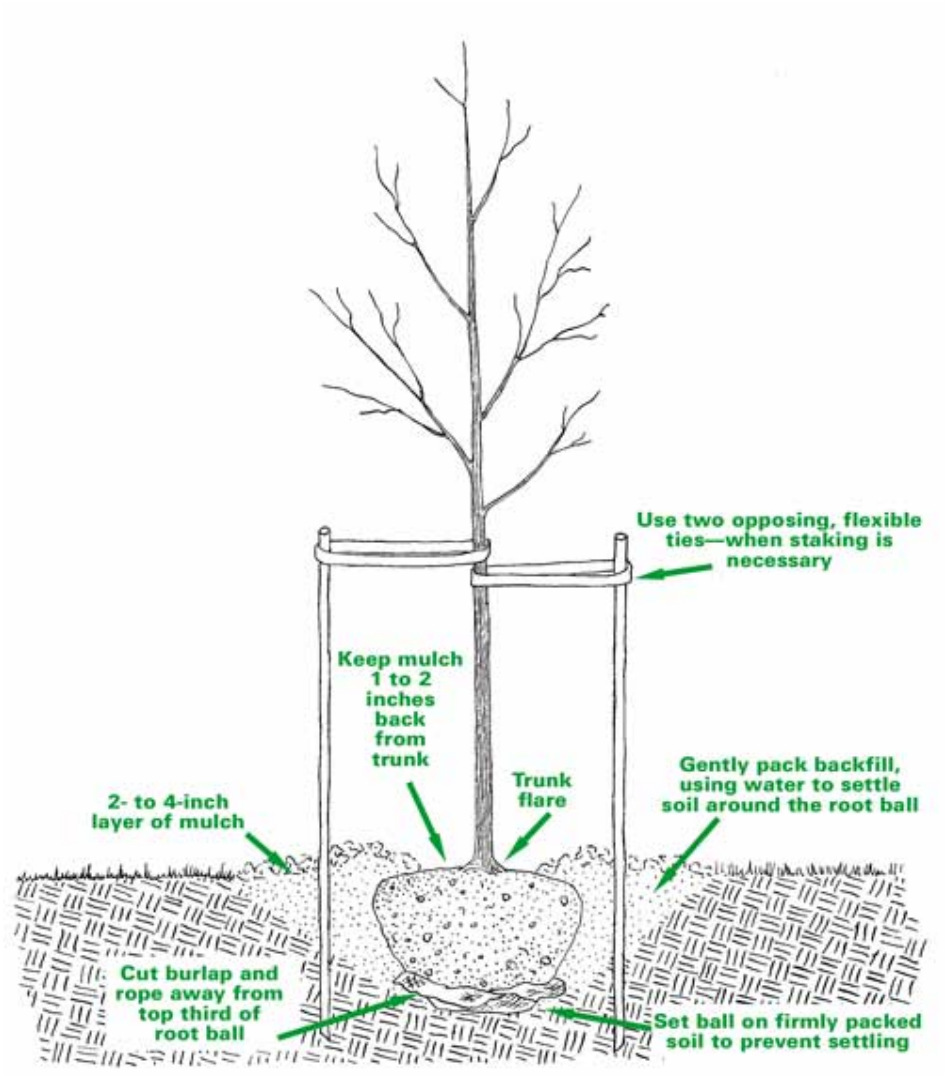

Fig. 1. New tree planting. (Copyright International Society of Arboriculture.)

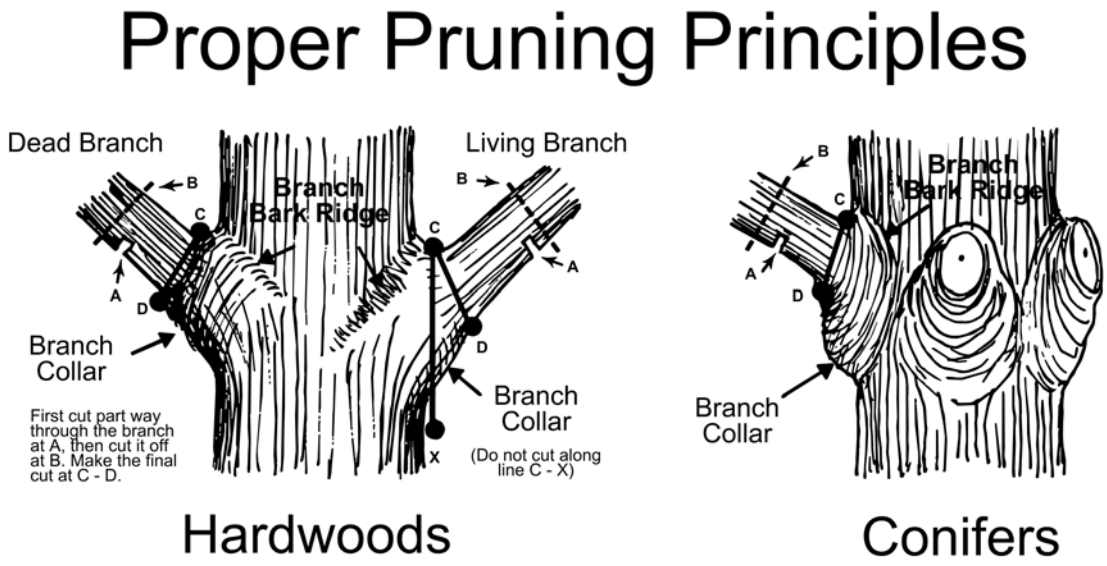

Fig.2. Proper Pruning Principles. Three-cut procedure. To remove a branch over one inch in diameter, make the first cut on the underside of the branch (A). Make the second cut through the branch at point one to two inches beyond the first cut (B). The final cut is made outside the branch bark ridge and branch collar (C to D). (Courtesy of the National Arbor Day Foundation)

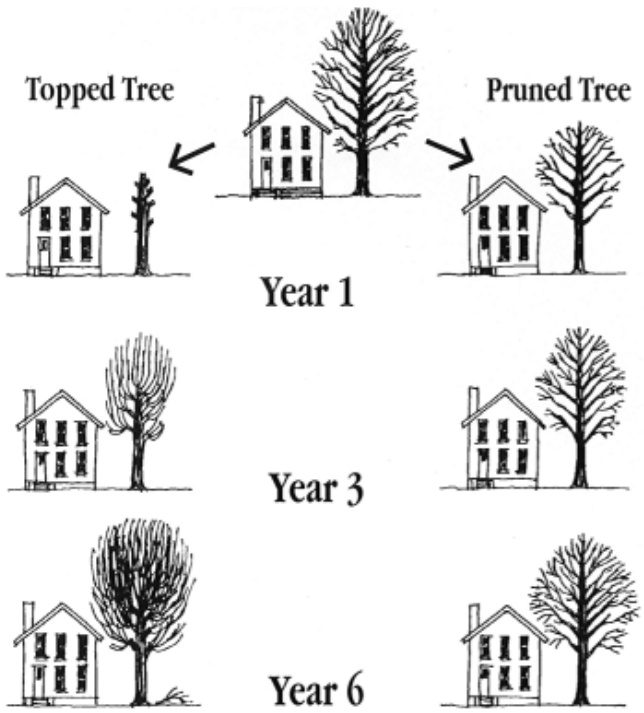

Proper Pruning — The Alternative to Topping

When a decision is made to reduce the size of an older tree, it can be topped, or it can be pruned properly. Although the speed and nature of regrowth will depend on species and local factors, any comparison between irresponsible topping and competent pruning will be dramatic.

- **Year 1:**
  The topped tree is an ugly stub and a remnant of a once lovely tree. If pruned properly, the tree's size is reduced but form and beauty are retained.
- **Year 3:**
  Vigorous sprouts have sprung out of the topped tree in large numbers and are growing with abnormal rapidity. The pruned tree adds growth, but it does so more slowly and distributes it more normally.
- **Year 6:**
  In a relatively short time, the topped tree is as tall — and far bushier and more dangerous — than it was to begin with. The properly pruned tree is safer, more beautiful, and its size is better controlled.

Fig. 3. Proper Pruning vs. Topping Trees (Courtesy of the National Arbor Day Foundation)

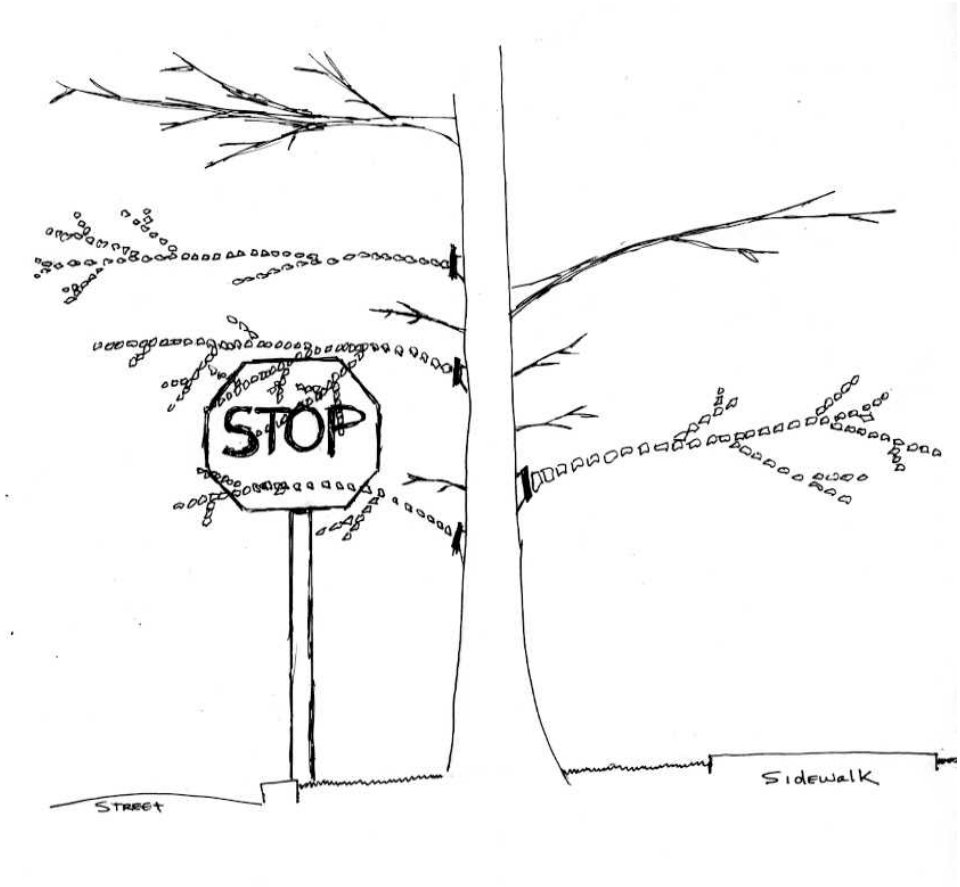

Fig. 4. Raising the canopy. Raise canopy for pedestrian; vehicle or other obstacle clearance. After proper canopy raising, a goal is to have foliage on branches in the upper 2/3 of the tree (bottom diagrams). Live crown ratio should be at least 60%.

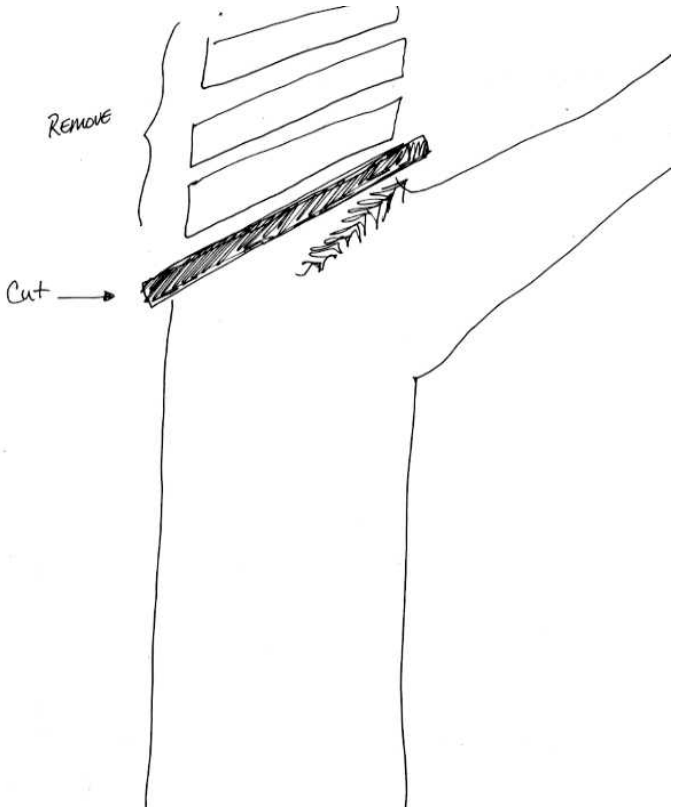

Fig 5. Reduction Cut. A reduction cut is make back to a branch no smaller than 1/2 the diameter of the cut stem.

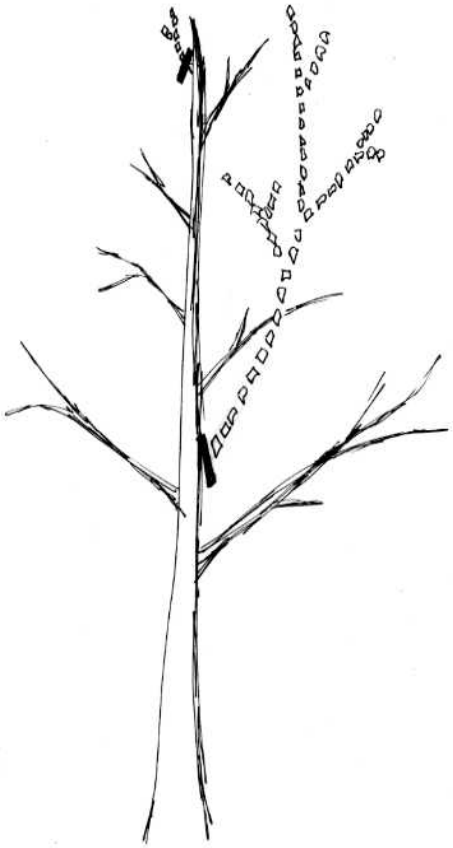

Fig. 6. Maintaining a dominant leader. Protect leader from competition by removing co-dominance leaders.

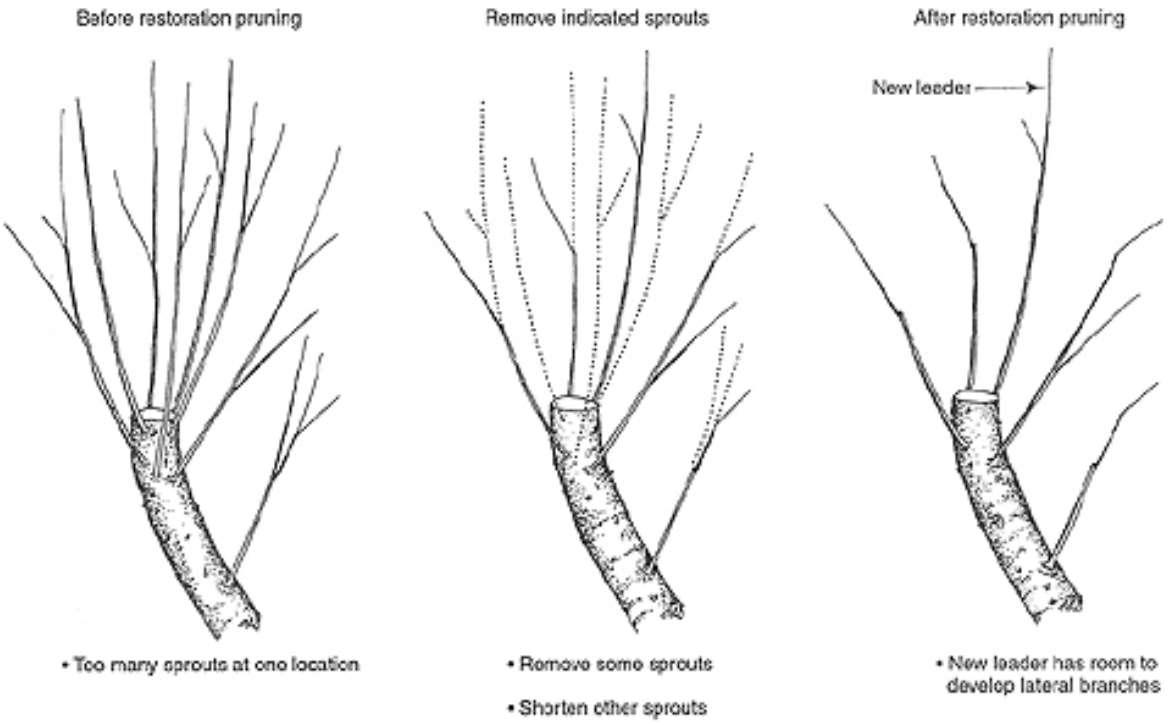

Fig.7. Crown restoration of a topped tree. Illustrations by Edward F. Gilman, Professor, Environmental Horticulture Department, IFAS, University of Florida.

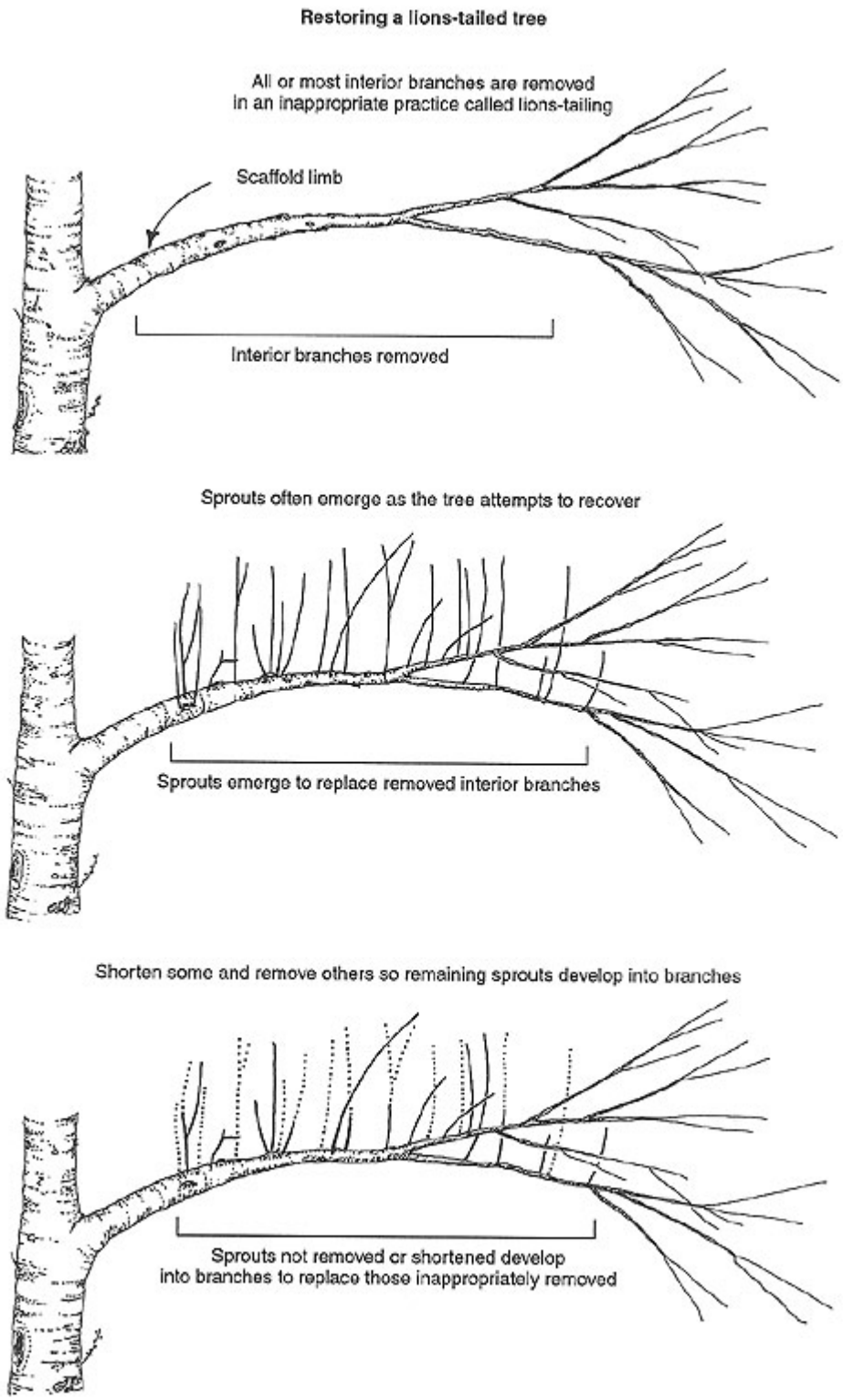

Fig.8. Restoring a lions-tail tree. Illustrations by Edward F. Gilman, Professor, Environmental Horticulture Department, IFAS, University of Florida.

REFERENCES

American National Standards Institute. 2006. *Safety Standards.* ANSI Z133.1 2006 New York: American National Standards Institute

American National Standards Institute. 2001. *Pruning Standards.* ANSI A300 New York: American National Standards Institute

Gilman, E.F. 2002. *An Illustrated Guide to Pruning* (2nd ed). Delmar Publishers, Albany NY.

Gilman, E.F. 2007 *University of Florida Pruning Shade Trees in Landscapes.* Copyright 2007 University of Florida, IFAS Extension

Harris, R.W., J.R. Clark, and N.P. Matheny. 2004. *Arboriculture: Integrated Management of Landscape Trees, Shrubs, and Vines* (4th ed.). Prentice Hall, Upper Saddle River, NJ. Arboriculture. Integrated Management of Landscape Trees, Shrubs and Vines.

Gary W. Watson, E.B. Himelick 1997-07. *Principles and Practices of Planting.* International Society of Aboriculture, Champaign, IL

Amercian Standard for Nursery Stock. 2004 ANSI Z60.1, American Nursery and Landscape Association, 1000 Vermont Ave., NW, Ste. 300, Washington, DC 20005, Website: www.anla.org

Standardized Plant Names. 1942. American Joint Committee on Horticulture Nomenclature, Horace McFarland Company, Harrisburg, PA

International Society of Arboriculture (ISA), Website: www.isa-arbor.com/home.aspx

Arbor Day Foundation, Website: www.arborday.org

Tree Care Industry Association, Website: www.tcia.org